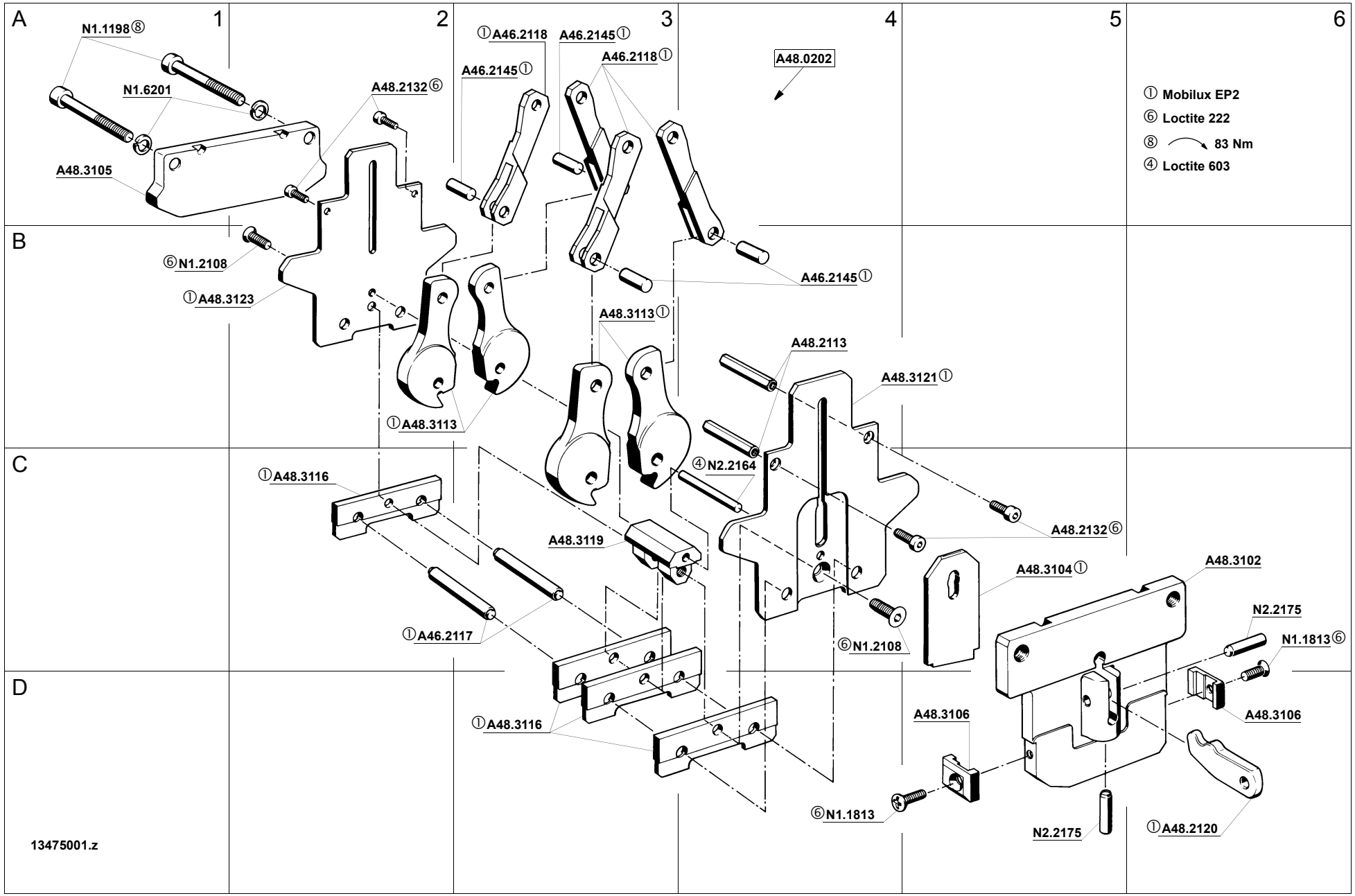
A
B
C
D
1
2
3
4
5
6
N1.1198⑧
N1.6201
A48.3105
A48.2132⑥
①A46.2118
A46.2145①
A46.2145①
A46.2118①
A48.0202
⑥N1.2108
①A48.3123
A46.2145①
A48.3113①
A48.2113
A48.3121①
①A48.3113
④N2.2164
①A48.3116
A48.3119
A48.2132⑥
A48.3104①
A48.3102
N2.2175
N1.1813⑥
①A46.2117
⑥N1.2108
①A48.3116
A48.3106
A48.3106
⑥N1.1813
N2.2175
①A48.2120
① Mobilux EP2
⑥ Loctite 222
⑧ 83 Nm
④ Loctite 603
13475001.z

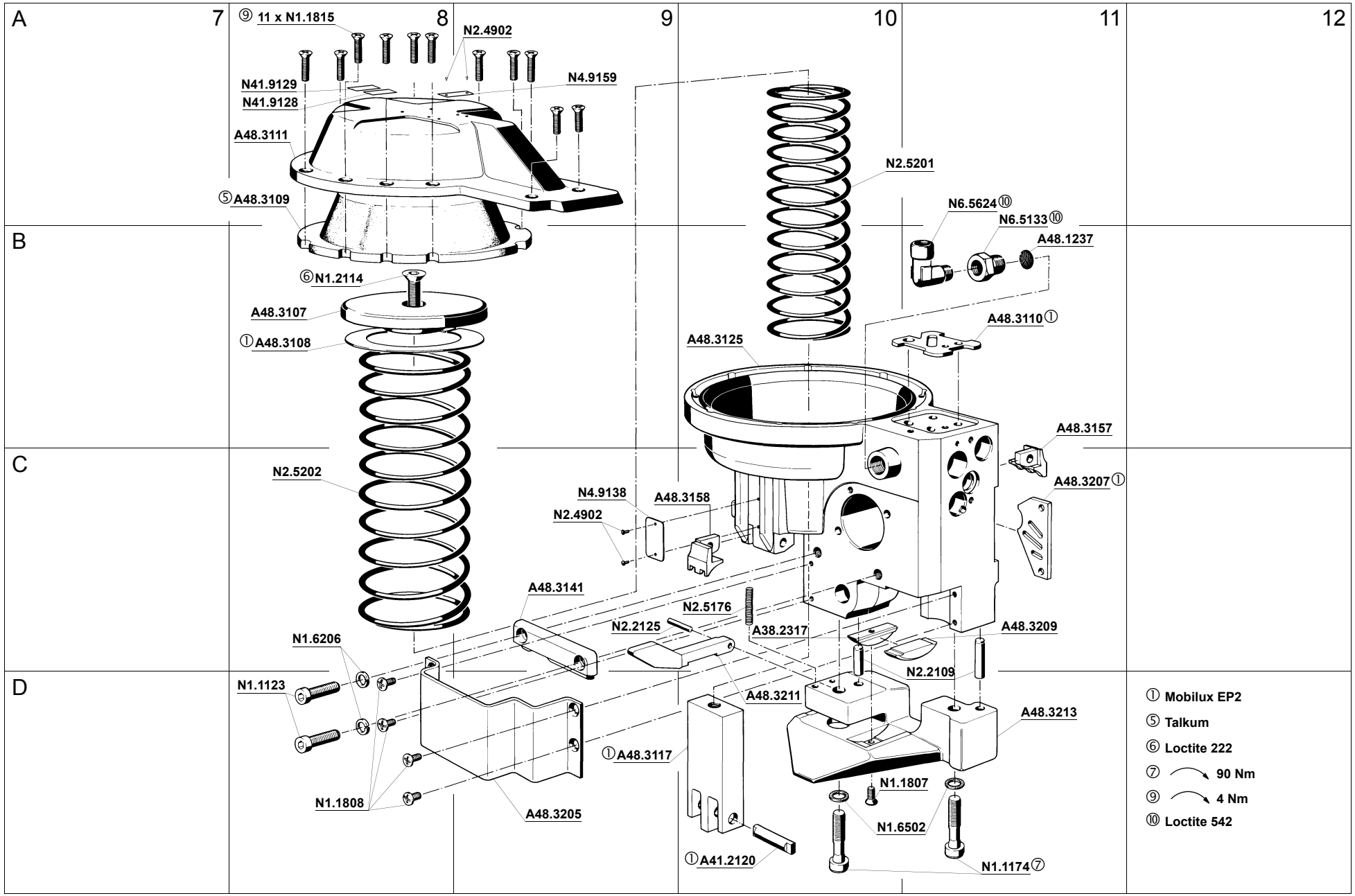
A
B
C
D
7
8
9
10
11
12
⑨ 11 x N1.1815
N2.4902
N41.9129
N41.9128
N4.9159
A48.3111
⑤A48.3109
⑥N1.2114
A48.3107
①A48.3108
N2.5202
N2.5201
N6.5624⑩
N6.5133⑩
A48.1237
A48.3110①
A48.3125
A48.3157
A48.3207①
N4.9138
A48.3158
N2.4902
A48.3141
N2.5176
N2.2125
A38.2317
A48.3209
N1.6206
N2.2109
N1.1123
A48.3211
A48.3213
①A48.3117
N1.1807
N1.1808
A48.3205
N1.6502
①A41.2120
N1.1174⑦
① Mobilux EP2
⑤ Talkum
⑥ Loctite 222
⑦ 90 Nm
⑨ 4 Nm
⑩ Loctite 542

FROMM

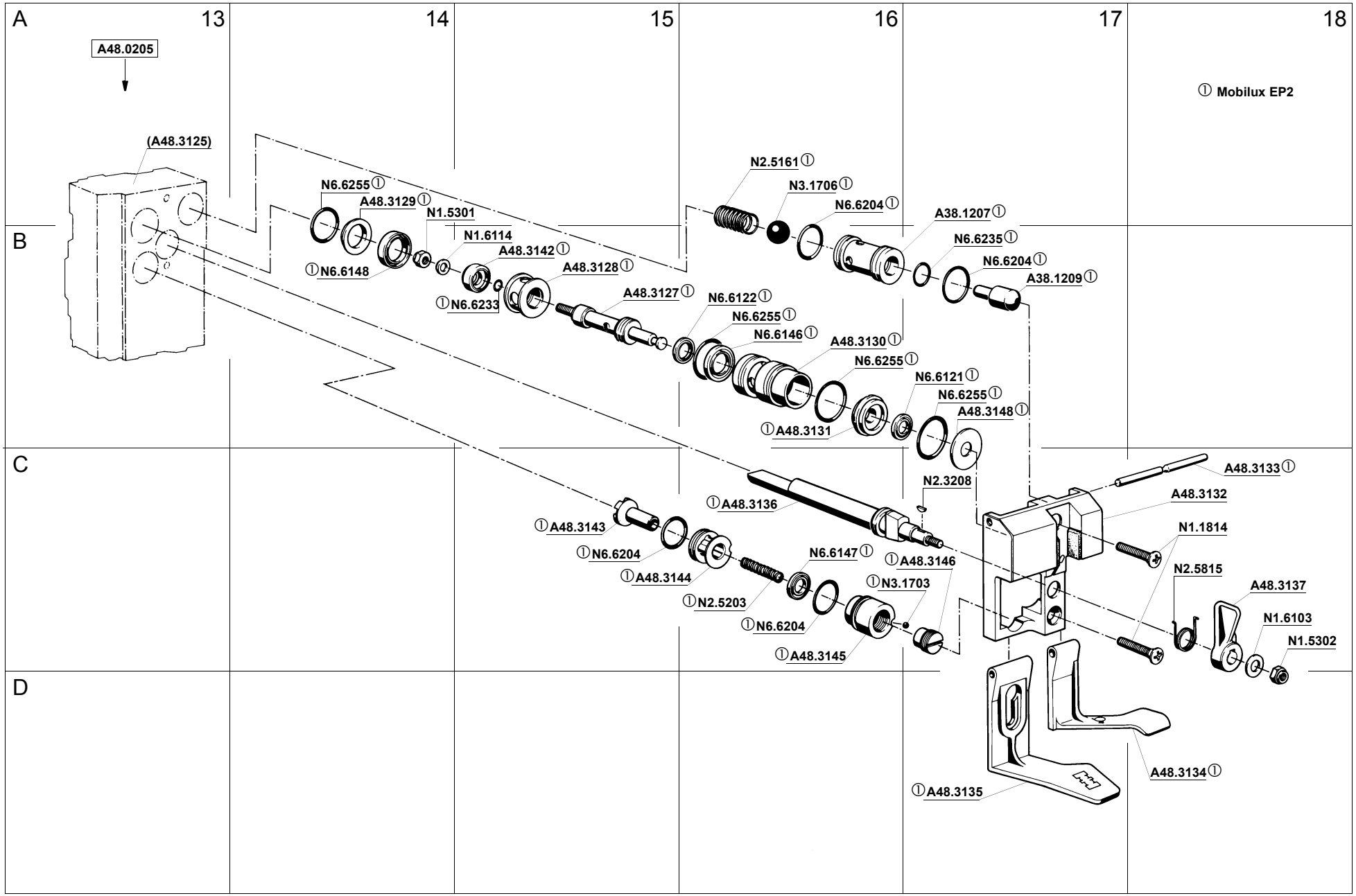
A
B
C
D
13
14
15
16
17
18
A48.0205
(A48.3125)
① Mobilux EP2
N6.6255①
A48.3129①
N1.5301
N1.6114
A48.3142①
①N6.6148
A48.3128①
①N6.6233
A48.3127①
N6.6122①
N6.6255①
N6.6146①
A48.3130①
N6.6255①
N6.6121①
N6.6255①
A48.3148①
①A48.3131
N2.5161①
N3.1706①
N6.6204①
A38.1207①
N6.6235①
N6.6204①
A38.1209①
A48.3133①
A48.3132
N2.3208
①A48.3136
①A48.3143
①N6.6204
①A48.3144
N6.6147①
①A48.3146
①N3.1703
①N2.5203
①N6.6204
①A48.3145
N1.1814
N2.5815
A48.3137
N1.6103
N1.5302
A48.3134①
①A48.3135

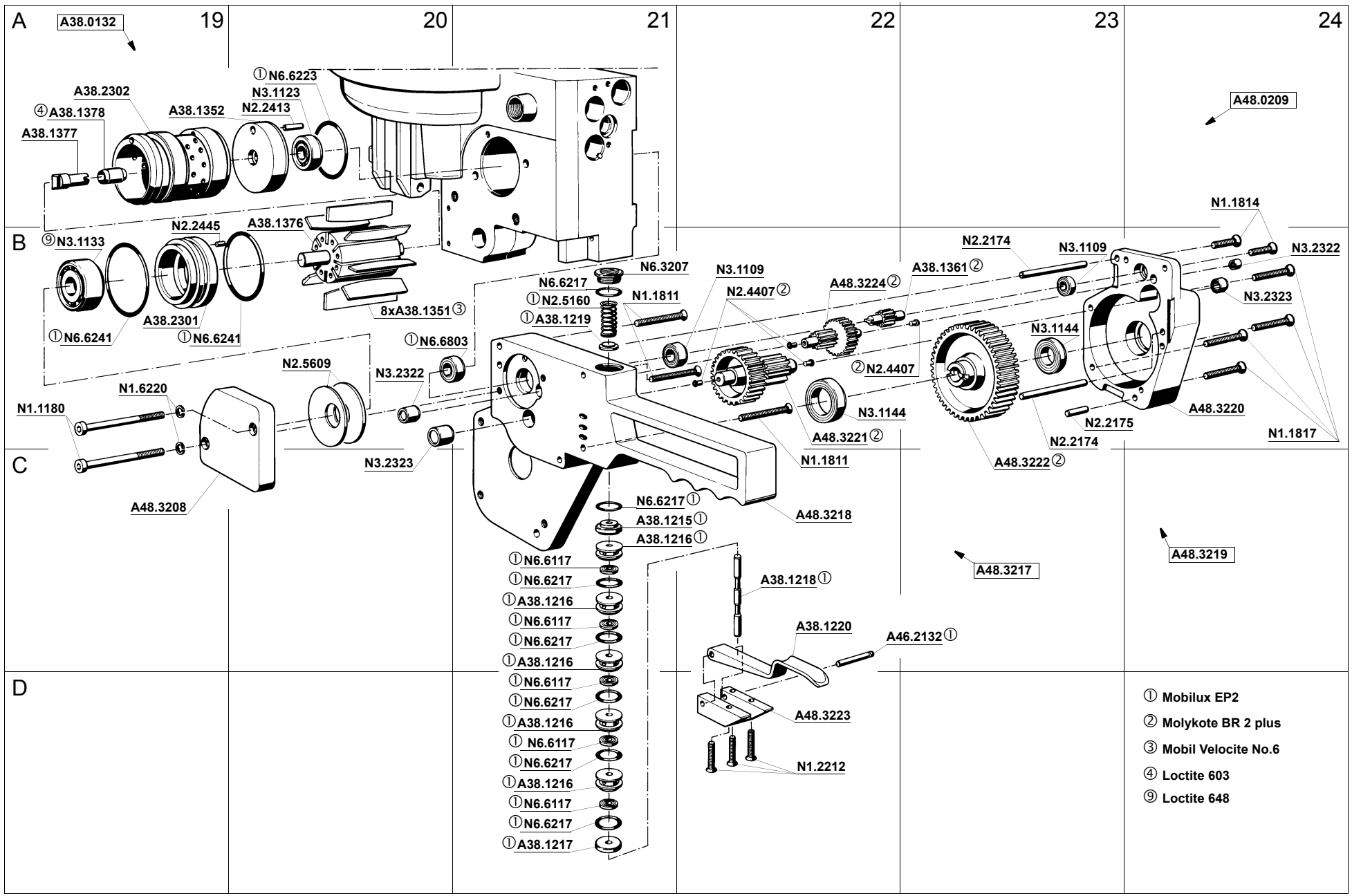
A
B
C
D
19
20
21
22
23
24
A38.0132
A48.0209
A48.3217
A48.3219
①N6.6223
N3.1123
N2.2413
A38.2302
④A38.1378
A38.1352
A38.1377
N2.2445
A38.1376
⑨N3.1133
A38.2301
①N6.6241
①N6.6241
8xA38.1351③
N6.3207
N6.6217
①N2.5160
①A38.1219
N1.1811
N3.1109
N2.4407②
A48.3224②
A38.1361②
N2.2174
N3.1109
N1.1814
N3.2322
N3.2323
N3.1144
②N2.4407
N3.1144
A48.3221②
N1.1811
A48.3222②
N2.2174
N2.2175
A48.3220
N1.1817
①N6.6803
N2.5609
N3.2322
N1.6220
N1.1180
N3.2323
A48.3208
A48.3218
N6.6217①
A38.1215①
A38.1216①
①N6.6117
①N6.6217
①A38.1216
①N6.6117
①N6.6217
①A38.1216
①N6.6117
①N6.6217
①A38.1216
①N6.6117
①N6.6217
①A38.1216
①N6.6117
①N6.6217
①A38.1217
A38.1218①
A38.1220
A46.2132①
A48.3223
N1.2212
① Mobilux EP2
② Molykote BR 2 plus
③ Mobil Velocite No.6
④ Loctite 603
⑨ Loctite 648

FROMM

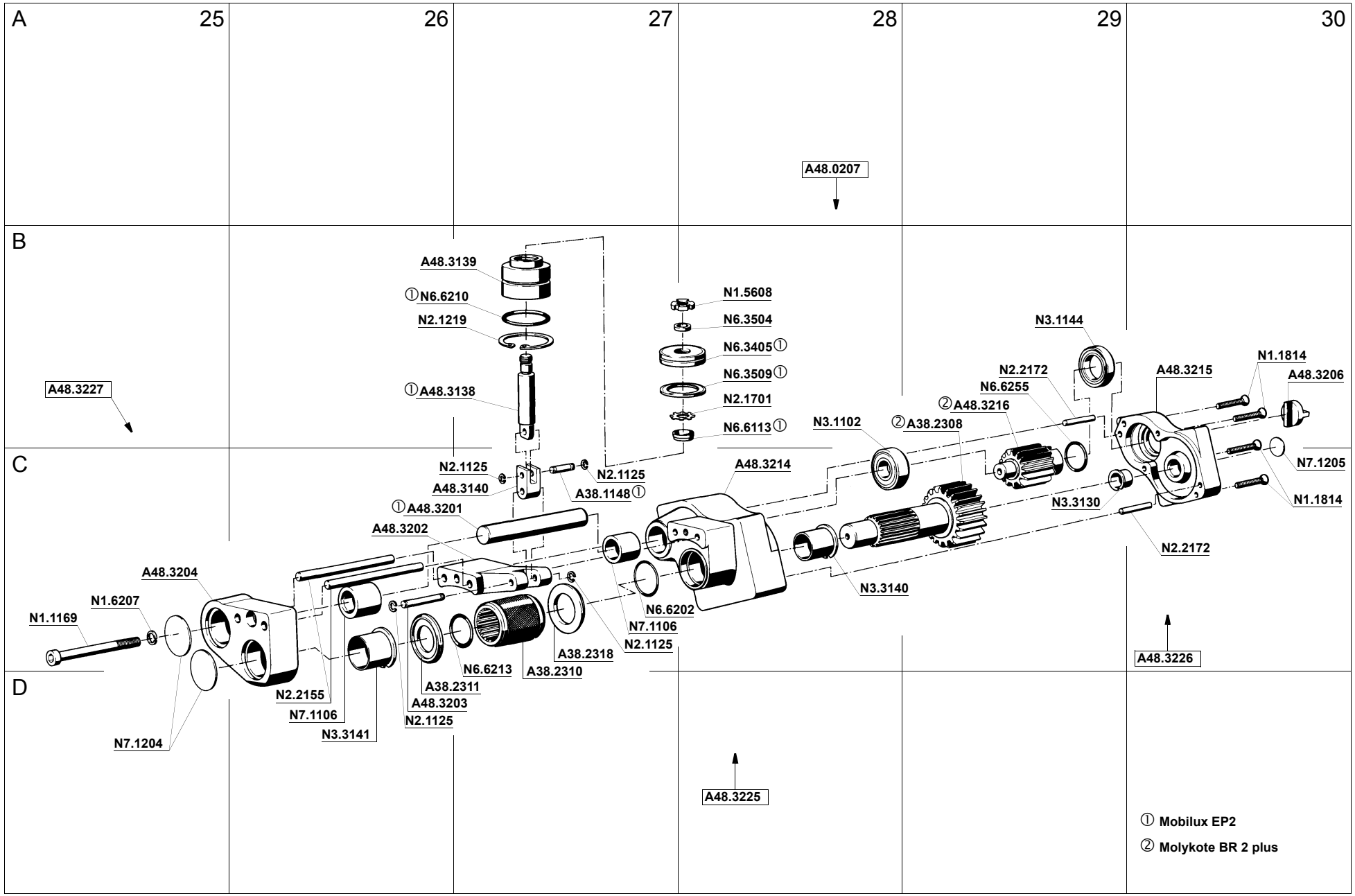
A
25
26
27
28
29
30
B
C
D
A48.0207
A48.3227
A48.3139
①N6.6210
N2.1219
①A48.3138
N1.5608
N6.3504
N6.3405①
N6.3509①
N2.1701
N6.6113①
N3.1144
N2.2172
N6.6255
②A48.3216
N3.1102
②A38.2308
A48.3215
N1.1814
A48.3206
N7.1205
N1.1814
N3.3130
N2.2172
N2.1125
A48.3140
N2.1125
A38.1148①
A48.3214
①A48.3201
A48.3202
A48.3204
N1.6207
N1.1169
N3.3140
N6.6202
N7.1106
N2.1125
A38.2318
A48.3226
N6.6213
A38.2310
A38.2311
N2.2155
N7.1106
A48.3203
N2.1125
N3.3141
N7.1204
A48.3225
① Mobilux EP2
② Molykote BR 2 plus