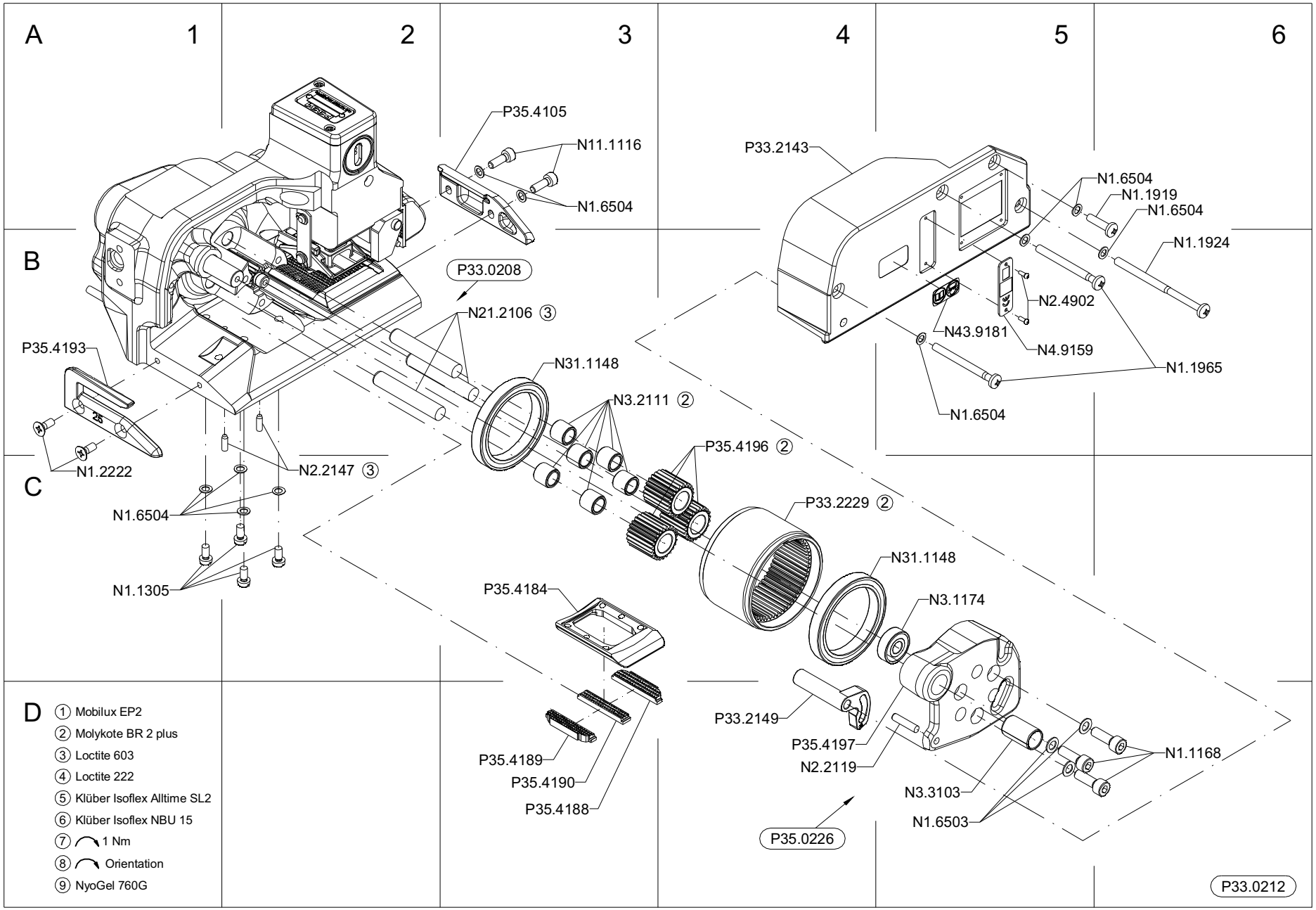
A
1
2
3
4
5
6
B
C
D
P35.4105
N11.1116
N1.6504
P33.2143
N1.6504
N1.1919
N1.6504
N1.1924
P33.0208
N21.2106 ③
N2.4902
N43.9181
N4.9159
N1.1965
N1.6504
P35.4193
N31.1148
N3.2111 ②
P35.4196 ②
N1.2222
N2.2147 ③
N1.6504
P33.2229 ②
N31.1148
N1.1305
P35.4184
N3.1174
P33.2149
P35.4197
N2.2119
N1.1168
P35.4189
P35.4190
P35.4188
N3.3103
N1.6503
P35.0226
P33.0212
① Mobilux EP2
② Molykote BR 2 plus
③ Loctite 603
④ Loctite 222
⑤ Klüber Isoflex Alltime SL2
⑥ Klüber Isoflex NBU 15
⑦ 1 Nm
⑧ Orientation
⑨ NyoGel 760G

FROMM

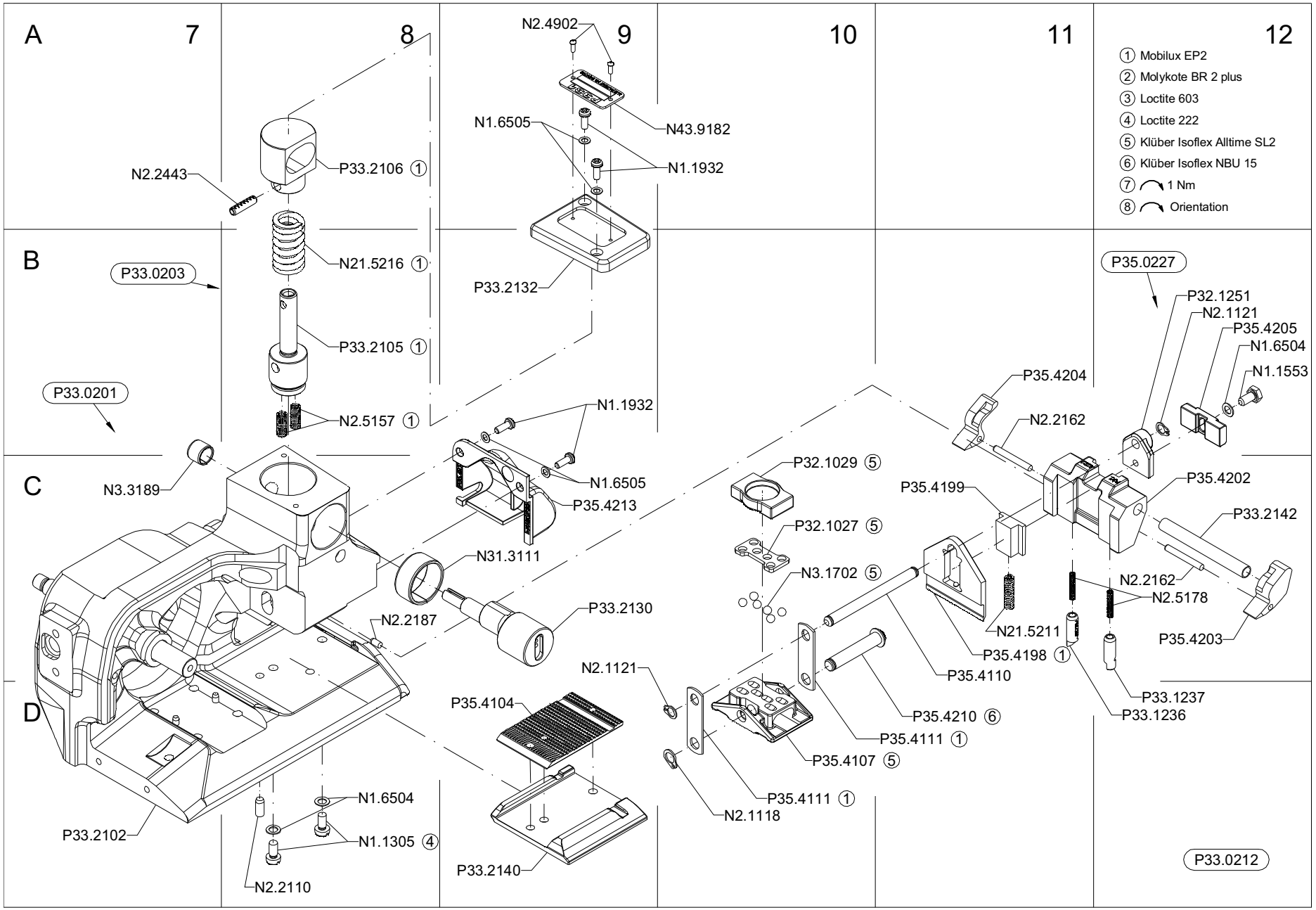
A
7
8
9
10
11
12
B
C
D
① Mobilux EP2
② Molykote BR 2 plus
③ Loctite 603
④ Loctite 222
⑤ Klüber Isoflex Alltime SL2
⑥ Klüber Isoflex NBU 15
⑦ 1 Nm
⑧ Orientation
N2.4902
N1.6505
N43.9182
N1.1932
N2.2443
P33.2106 ①
N21.5216 ①
P33.2132
P33.0203
P33.2105 ①
P33.0201
N2.5157 ①
N1.1932
N3.3189
N1.6505
P35.4213
N31.3111
P33.2130
N2.2187
P32.1029 ⑤
P32.1027 ⑤
N3.1702 ⑤
N2.1121
P35.4104
P35.4107 ⑤
P35.4111 ①
N2.1118
P35.4210 ⑥
P35.4110
P35.4198 ①
N21.5211
P35.4199
P35.4204
N2.2162
P35.0227
P32.1251
N2.1121
P35.4205
N1.6504
N1.1553
P35.4202
P33.2142
N2.2162
N2.5178
P35.4203
P33.1237
P33.1236
N1.6504
N1.1305 ④
N2.2110
P33.2102
P33.2140
P33.0212

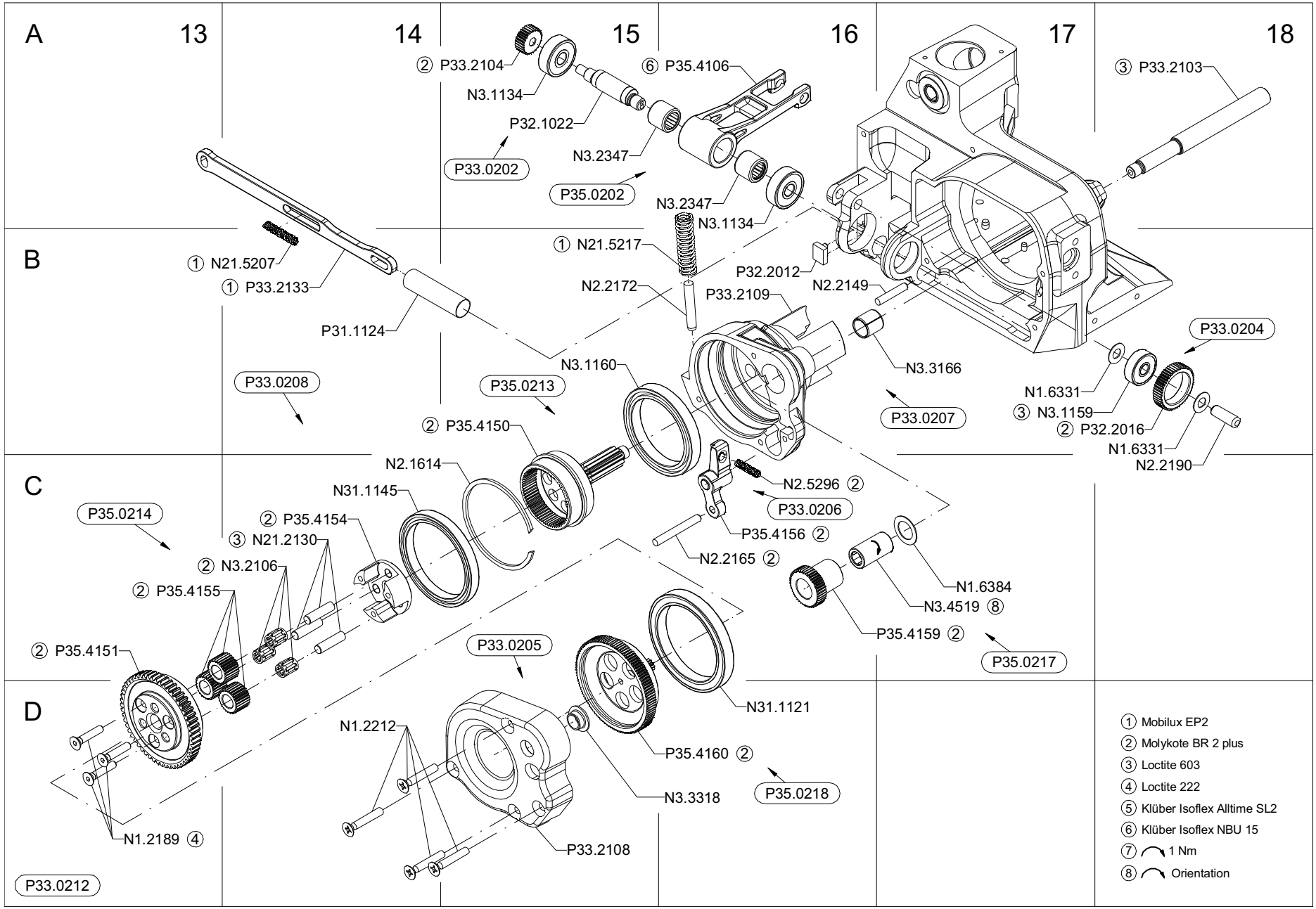
A
B
C
D
13
14
15
16
17
18
② P33.2104
N3.1134
P32.1022
P33.0202
⑥ P35.4106
N3.2347
P35.0202
N3.2347
N3.1134
③ P33.2103
① N21.5207
① P33.2133
P31.1124
① N21.5217
N2.2172
P32.2012
N2.2149
P33.2109
P33.0204
N3.3166
N3.1160
P33.0208
P35.0213
P33.0207
N1.6331
③ N3.1159
② P32.2016
N1.6331
N2.2190
② P35.4150
N2.1614
N2.5296 ②
P33.0206
N31.1145
P35.0214
② P35.4154
③ N21.2130
P35.4156 ②
N2.2165 ②
② N3.2106
② P35.4155
N1.6384
N3.4519 ⑧
P35.4159 ②
P35.0217
② P35.4151
P33.0205
N31.1121
N1.2212
P35.4160 ②
N3.3318
P35.0218
N1.2189 ④
P33.2108
P33.0212
① Mobilux EP2
② Molykote BR 2 plus
③ Loctite 603
④ Loctite 222
⑤ Klüber Isoflex Alltime SL2
⑥ Klüber Isoflex NBU 15
⑦ 1 Nm
⑧ Orientation

FROMM

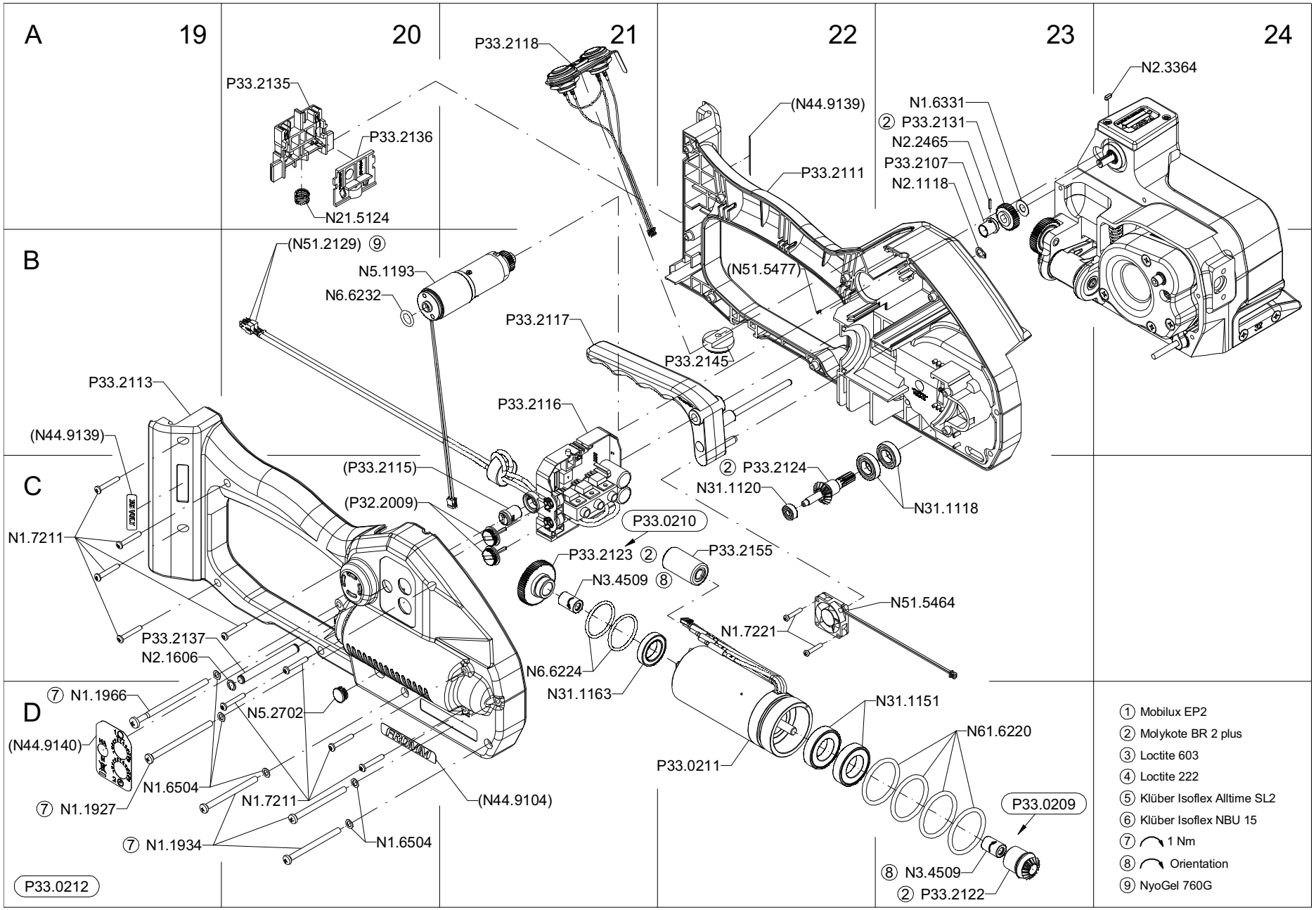
A
19
20
21
22
23
24
B
C
D
P33.2135
P33.2136
N21.5124
P33.2118
(N44.9139)
P33.2111
N1.6331
② P33.2131
N2.2465
P33.2107
N2.1118
N2.3364
(N51.2129) ⑨
N5.1193
N6.6232
(N51.5477)
P33.2117
P33.2145
P33.2113
P33.2116
(N44.9139)
(P33.2115)
(P32.2009)
② P33.2124
N31.1120
N31.1118
P33.0210
N1.7211
P33.2123 ②
P33.2155
N3.4509 ⑧
N51.5464
N1.7221
P33.2137
N2.1606
N6.6224
N31.1163
⑦ N1.1966
N5.2702
N31.1151
N61.6220
(N44.9140)
P33.0211
N1.6504
N1.7211
(N44.9104)
⑦ N1.1927
P33.0209
⑦ N1.1934
N1.6504
⑧ N3.4509
② P33.2122
P33.0212
① Mobilux EP2
② Molykote BR 2 plus
③ Loctite 603
④ Loctite 222
⑤ Klüber Isoflex Alltime SL2
⑥ Klüber Isoflex NBU 15
⑦ 1 Nm
⑧ Orientation
⑨ NyoGel 760G