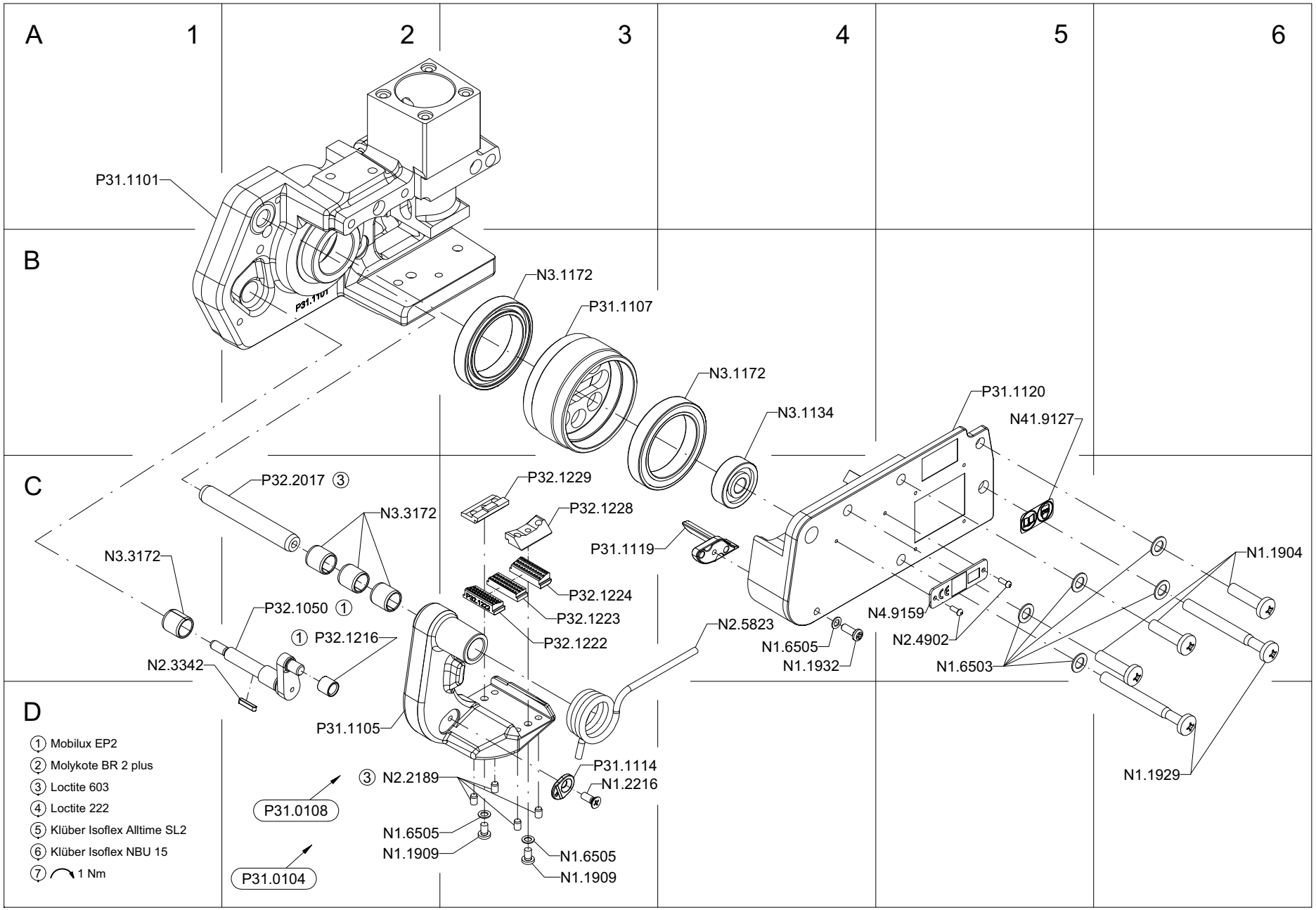
A
1
2
3
4
5
6
B
C
D
P31.1101
P31.1101
N3.1172
P31.1107
N3.1172
N3.1134
P31.1120
N41.9127
P32.2017 ③
P32.1229
N3.3172
P32.1228
N3.3172
P31.1119
N1.1904
P32.1224
P32.1050 ①
P32.1223
① P32.1216
P32.1222
N2.5823
N4.9159
N2.4902
N1.6505
N1.1932
N1.6503
N2.3342
P31.1105
P31.1114
③ N2.2189
N1.2216
N1.1929
P31.0108
N1.6505
N1.1909
N1.6505
N1.1909
P31.0104
① Mobilux EP2
② Molykote BR 2 plus
③ Loctite 603
④ Loctite 222
⑤ Klüber Isoflex Alltime SL2
⑥ Klüber Isoflex NBU 15
⑦ 1 Nm

FROMM

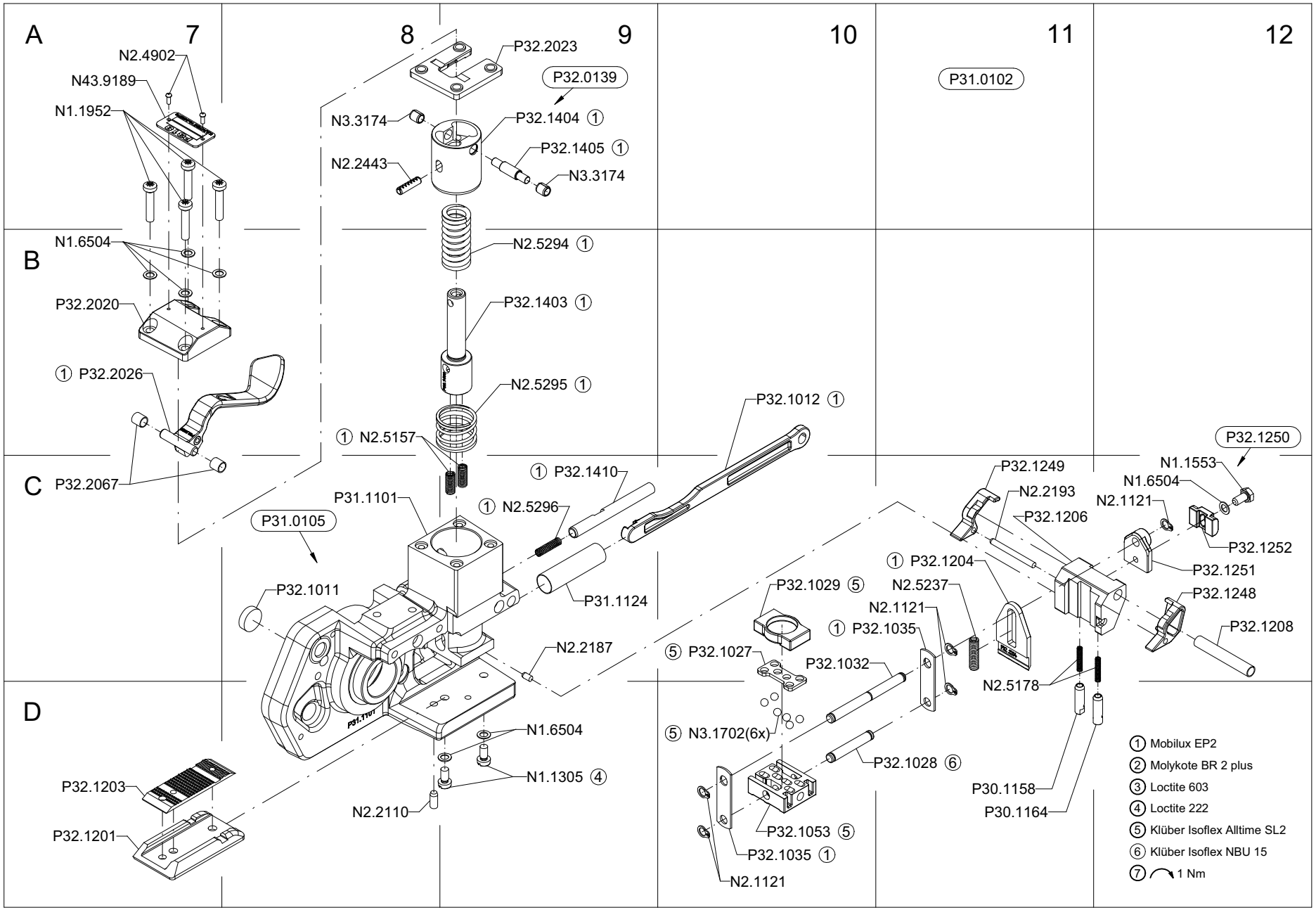
A
B
C
D
7
8
9
10
11
12
N2.4902
N43.9189
N1.1952
N1.6504
P32.2020
① P32.2026
P32.2067
P32.2023
P32.0139
N3.3174
P32.1404 ①
P32.1405 ①
N3.3174
N2.2443
N2.5294 ①
P32.1403 ①
N2.5295 ①
① N2.5157
① P32.1410
① N2.5296
P31.1101
P31.0105
P32.1011
P31.1124
N2.2187
N1.6504
N1.1305 ④
N2.2110
P32.1203
P32.1201
P31.0102
P32.1012 ①
P32.1029 ⑤
⑤ P32.1027
⑤ N3.1702(6x)
P32.1032
① P32.1035
P32.1028 ⑥
P32.1053 ⑤
P32.1035 ①
N2.1121
P32.1249
N2.2193
P32.1206
① P32.1204
N2.5237
N2.1121
N2.5178
P30.1158
P30.1164
P32.1250
N1.1553
N1.6504
N2.1121
P32.1252
P32.1251
P32.1248
P32.1208
① Mobilux EP2
② Molykote BR 2 plus
③ Loctite 603
④ Loctite 222
⑤ Klüber Isoflex Alltime SL2
⑥ Klüber Isoflex NBU 15
⑦ 1 Nm

FROMM

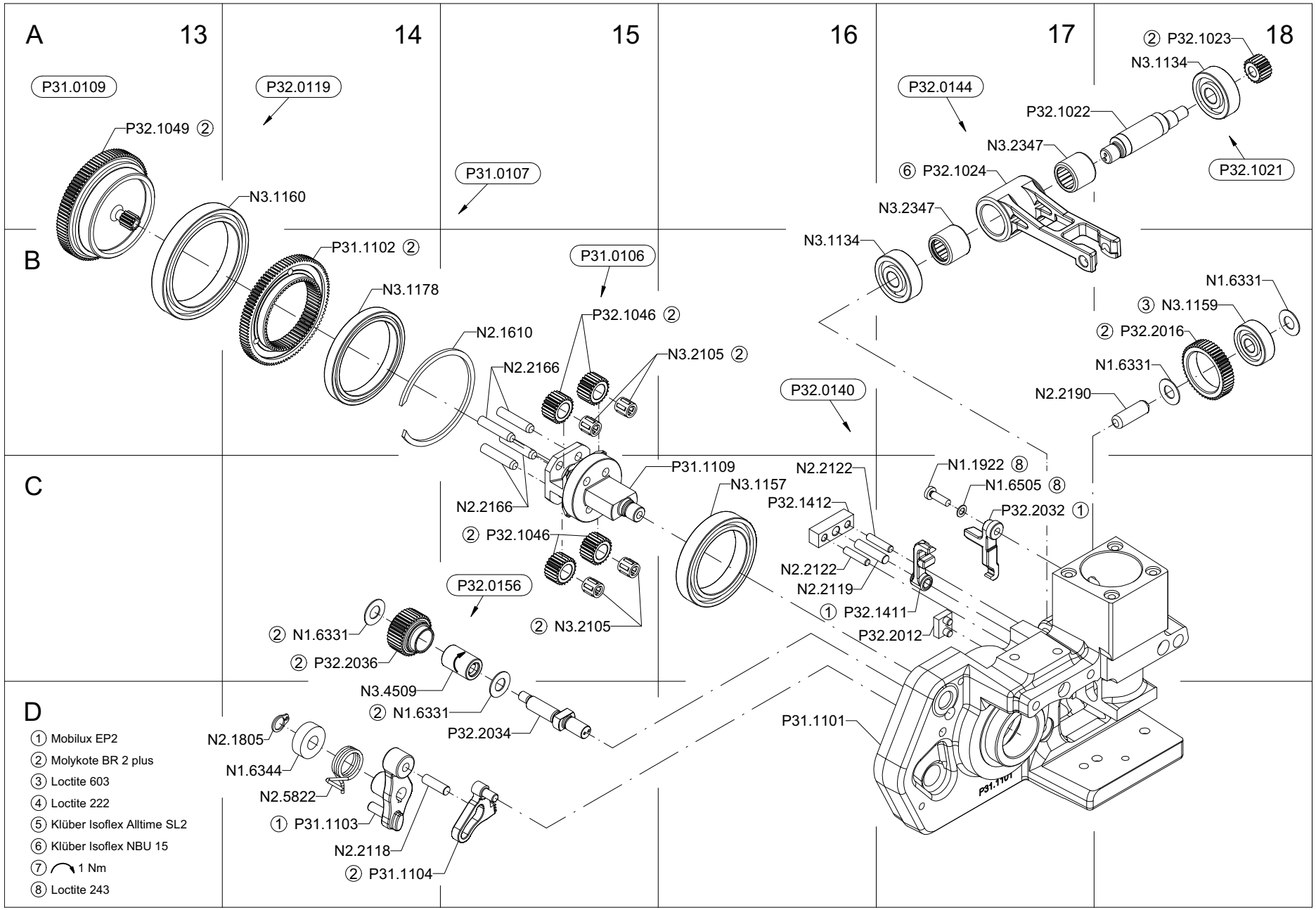
A
13
14
15
16
17
18
B
C
D
P31.0109
P32.1049 ②
P32.0119
N3.1160
P31.1102 ②
N3.1178
P31.0107
P31.0106
N2.1610
P32.1046 ②
N2.2166
N3.2105 ②
P32.0140
P31.1109
N3.1157
N2.2166
② P32.1046
② N3.2105
P32.0156
② N1.6331
② P32.2036
N3.4509
② N1.6331
P32.2034
N2.1805
N1.6344
N2.5822
① P31.1103
N2.2118
② P31.1104
① Mobilux EP2
② Molykote BR 2 plus
③ Loctite 603
④ Loctite 222
⑤ Klüber Isoflex Alltime SL2
⑥ Klüber Isoflex NBU 15
⑦ 1 Nm
⑧ Loctite 243
② P32.1023
N3.1134
P32.1022
P32.0144
N3.2347
⑥ P32.1024
P32.1021
N3.2347
N3.1134
N1.6331
③ N3.1159
② P32.2016
N1.6331
N2.2190
N2.2122
N1.1922 ⑧
N1.6505 ⑧
P32.1412
P32.2032 ①
N2.2122
N2.2119
① P32.1411
P32.2012
P31.1101

FROMM

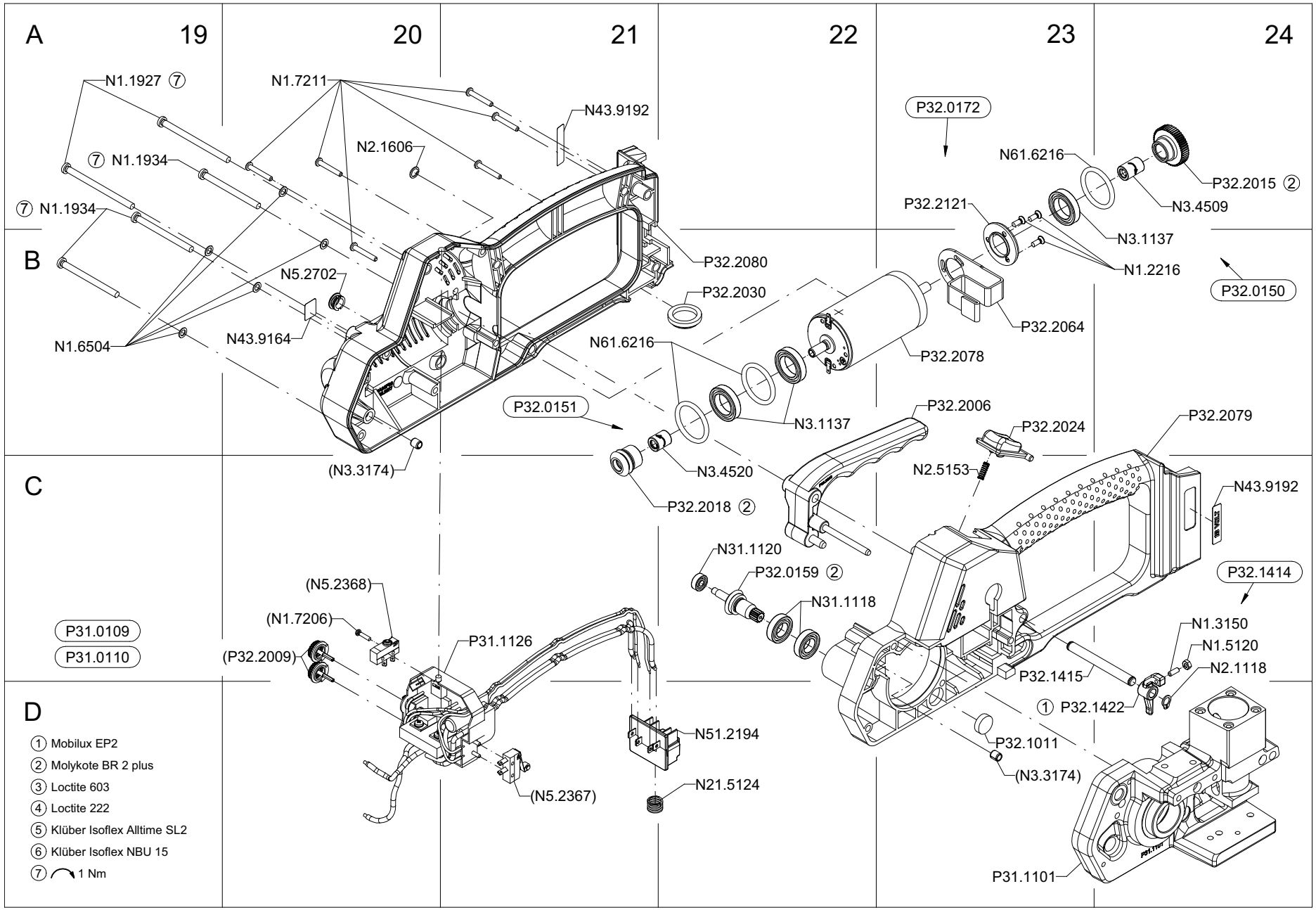
A
19
20
21
22
23
24
B
C
D
N1.1927 ⑦
⑦ N1.1934
⑦ N1.1934
N1.6504
N1.7211
N2.1606
N5.2702
N43.9164
(N3.3174)
N43.9192
P32.2080
P32.2030
N61.6216
P32.0151
N3.1137
N3.4520
P32.2018 ②
P32.0172
P32.2121
N61.6216
P32.2015 ②
N3.4509
N3.1137
N1.2216
P32.0150
P32.2064
P32.2078
P32.2006
P32.2024
N2.5153
P32.2079
N43.9192
N31.1120
P32.0159 ②
N31.1118
P32.1414
N1.3150
N1.5120
N2.1118
P32.1415
① P32.1422
P32.1011
(N3.3174)
P31.1101
(N5.2368)
(N1.7206)
(P32.2009)
P31.1126
(N5.2367)
N51.2194
N21.5124
P31.0109
P31.0110
① Mobilux EP2
② Molykote BR 2 plus
③ Loctite 603
④ Loctite 222
⑤ Klüber Isoflex Alltime SL2
⑥ Klüber Isoflex NBU 15
⑦ 1 Nm