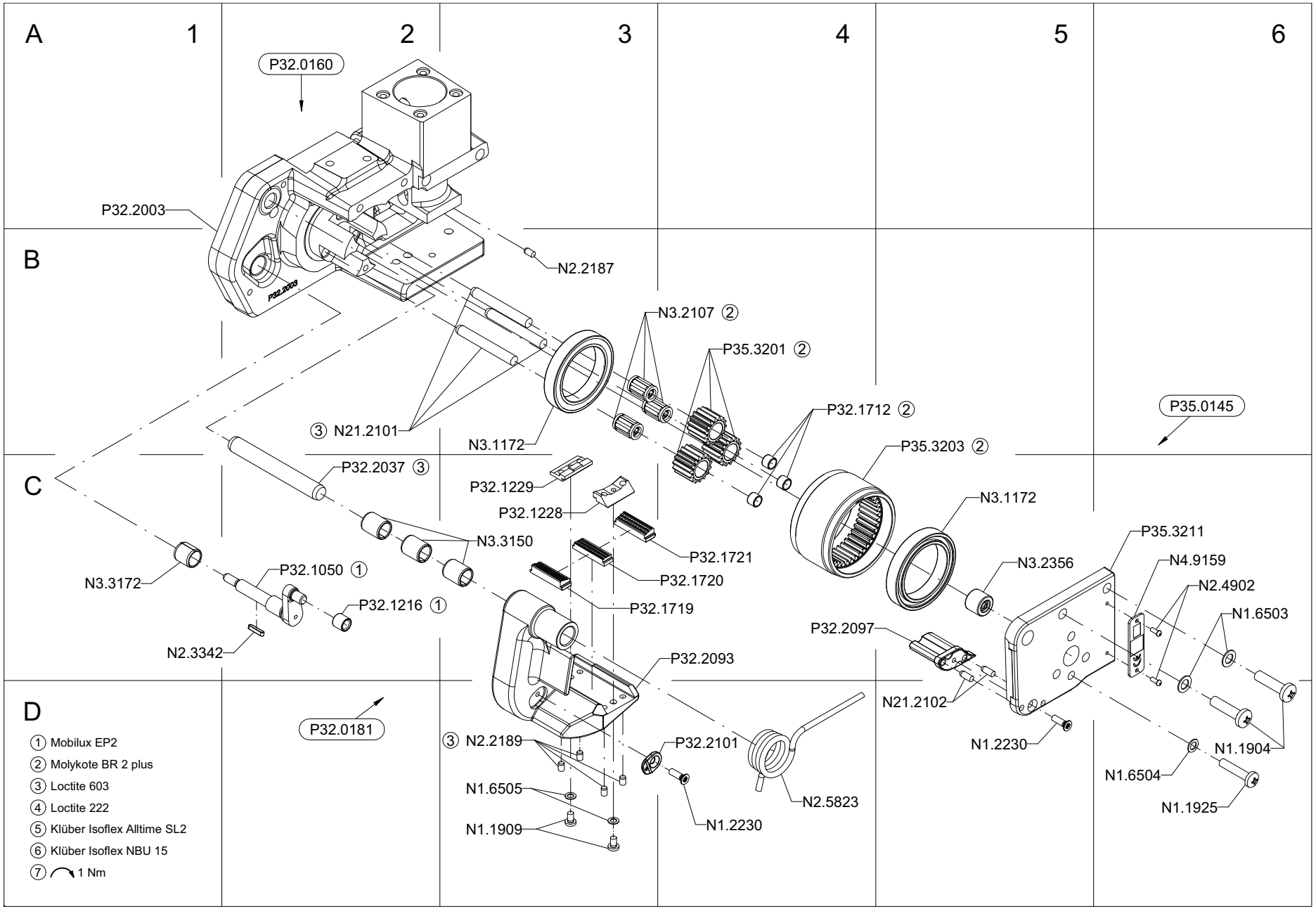
A
1
2
3
4
5
6
B
C
D
P32.0160
P32.2003
N2.2187
N3.2107 ②
P35.3201 ②
P32.1712 ②
P35.0145
③ N21.2101
N3.1172
P35.3203 ②
P32.2037 ③
P32.1229
P32.1228
N3.1172
N3.3150
P32.1721
P35.3211
N3.3172
P32.1050 ①
P32.1720
N3.2356
N4.9159
N2.4902
P32.1216 ①
P32.1719
N1.6503
P32.2097
N2.3342
P32.2093
N21.2102
P32.0181
③ N2.2189
P32.2101
N1.2230
N1.1904
N1.6504
N1.6505
N2.5823
N1.1925
N1.1909
N1.2230
① Mobilux EP2
② Molykote BR 2 plus
③ Loctite 603
④ Loctite 222
⑤ Klüber Isoflex Alltime SL2
⑥ Klüber Isoflex NBU 15
⑦ 1 Nm

FROMM

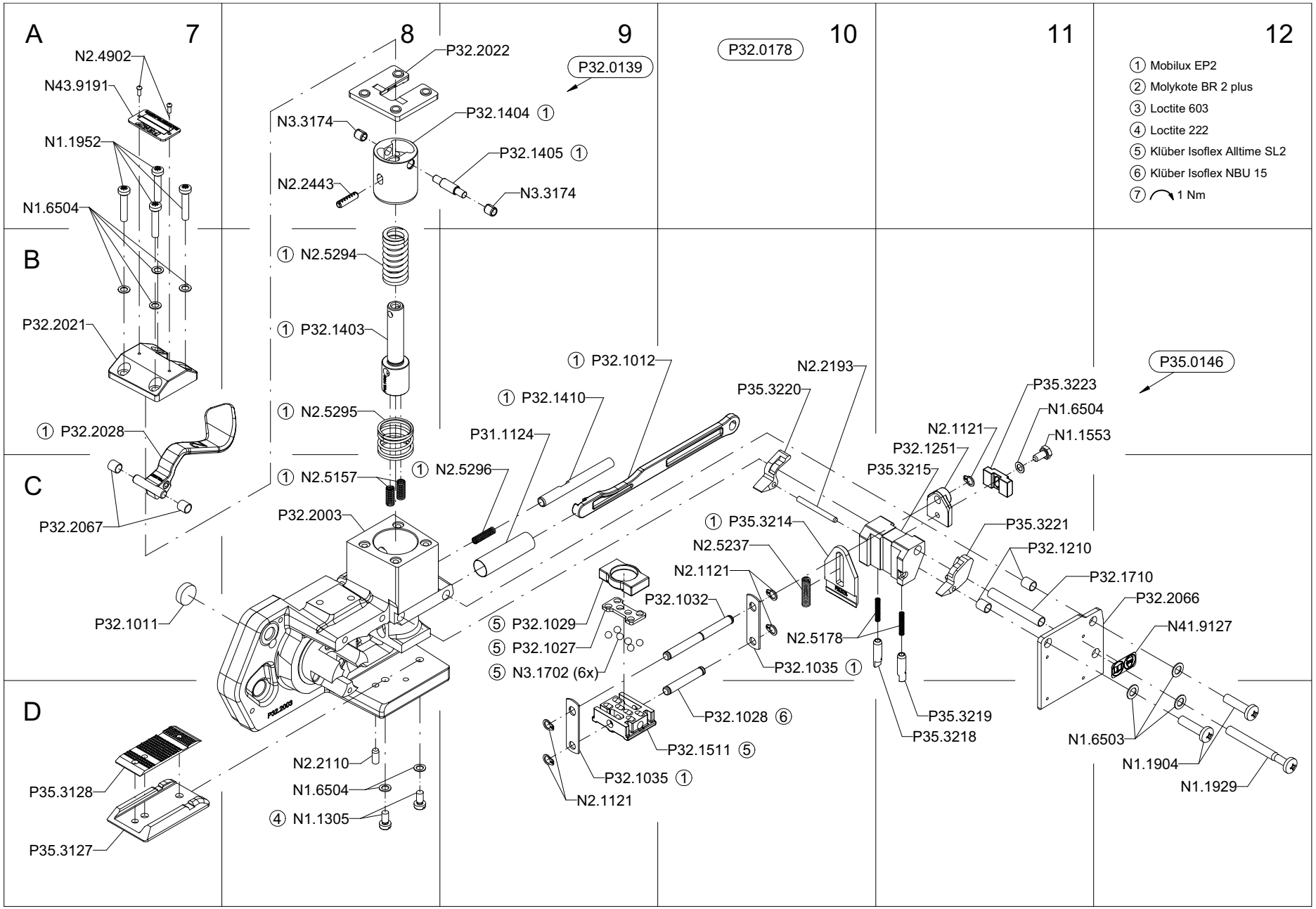
A
B
C
D
7
8
9
10
11
12
P32.0139
P32.0178
P35.0146
① Mobilux EP2
② Molykote BR 2 plus
③ Loctite 603
④ Loctite 222
⑤ Klüber Isoflex Alltime SL2
⑥ Klüber Isoflex NBU 15
⑦ 1 Nm
N2.4902
N43.9191
N1.1952
N1.6504
P32.2021
① P32.2028
P32.2067
P32.1011
P35.3128
P35.3127
P32.2022
N3.3174
N2.2443
P32.1404 ①
P32.1405 ①
N3.3174
① N2.5294
① P32.1403
① N2.5295
① N2.5157
① N2.5296
P32.2003
N2.2110
N1.6504
④ N1.1305
① P32.1012
① P32.1410
P31.1124
⑤ P32.1029
⑤ P32.1027
⑤ N3.1702 (6x)
P32.1032
N2.1121
N2.5237
① P35.3214
N2.2193
P35.3220
N2.5178
P32.1035 ①
P32.1028 ⑥
P32.1511 ⑤
P32.1035 ①
N2.1121
P35.3219
P35.3218
P35.3223
N1.6504
N1.1553
N2.1121
P32.1251
P35.3215
P35.3221
P32.1210
P32.1710
P32.2066
N41.9127
N1.6503
N1.1904
N1.1929

FROMM

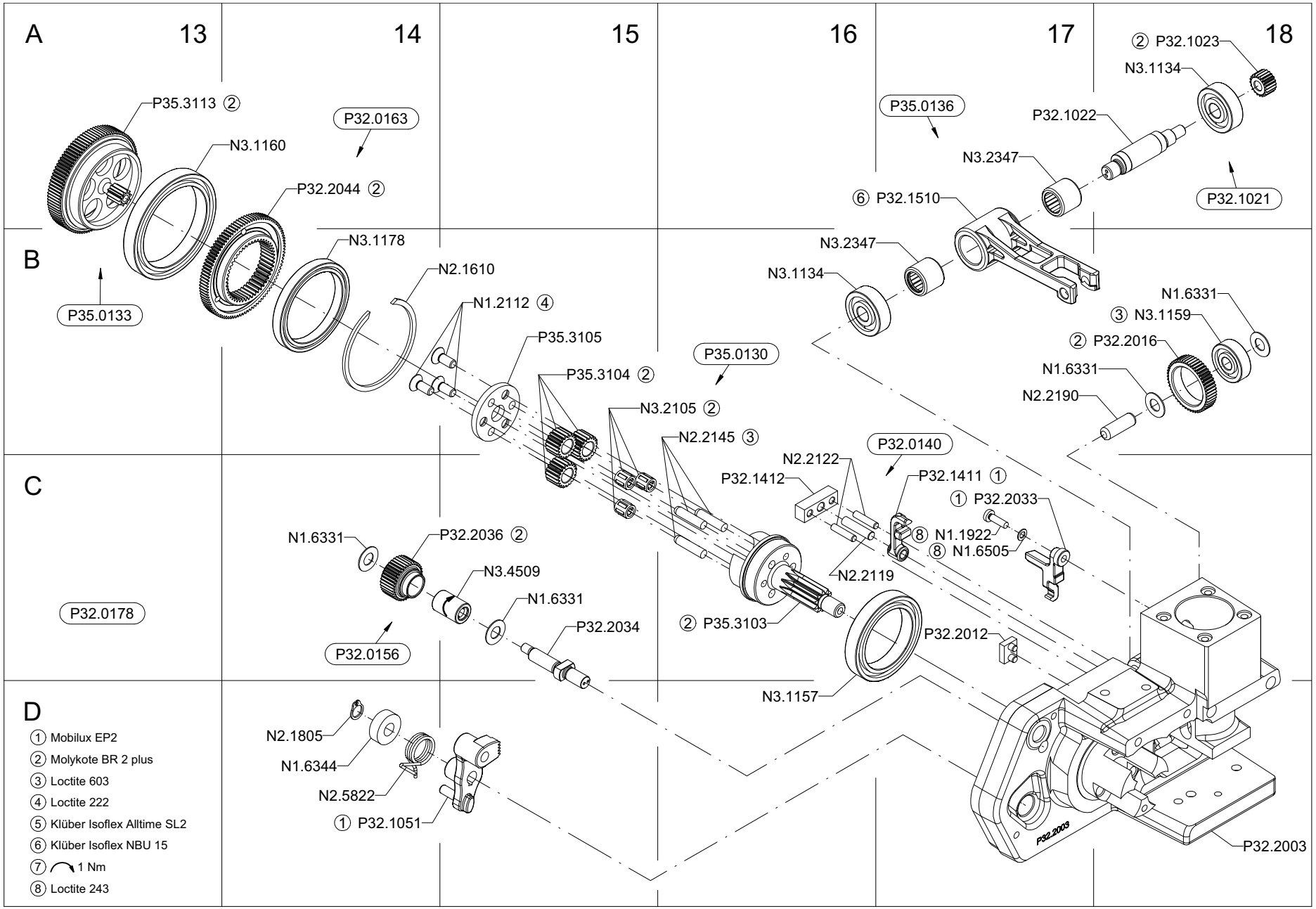
A
13
14
15
16
17
18
B
C
D
P35.3113 ②
N3.1160
P32.0163
P32.2044 ②
N3.1178
N2.1610
N1.2112 ④
P35.3105
P35.3104 ②
N3.2105 ②
N2.2145 ③
P35.0133
P35.0130
P35.0136
P32.1023 ②
N3.1134
P32.1022
N3.2347
P32.1021
⑥ P32.1510
N3.2347
N3.1134
N1.6331
③ N3.1159
② P32.2016
N1.6331
N2.2190
P32.0140
N2.2122
P32.1412
P32.1411 ①
① P32.2033
⑧ N1.1922
⑧ N1.6505
N2.2119
② P35.3103
P32.2012
N3.1157
N1.6331
P32.2036 ②
N3.4509
N1.6331
P32.2034
P32.0156
P32.0178
N2.1805
N1.6344
N2.5822
① P32.1051
P32.2003
① Mobilux EP2
② Molykote BR 2 plus
③ Loctite 603
④ Loctite 222
⑤ Klüber Isoflex Alltime SL2
⑥ Klüber Isoflex NBU 15
⑦ 1 Nm
⑧ Loctite 243

FROMM

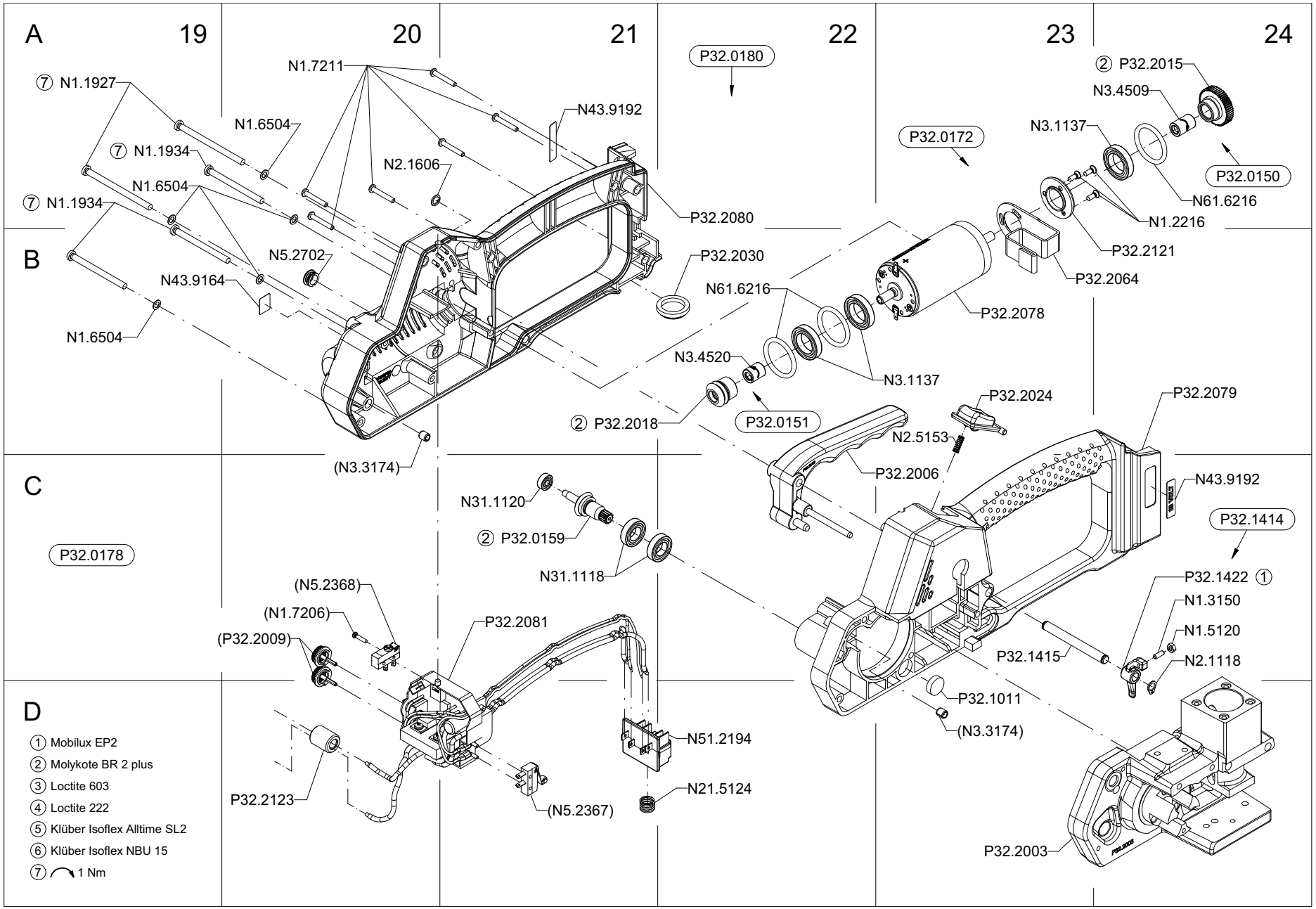
A
19
20
21
22
23
24
B
C
D
⑦ N1.1927
⑦ N1.1934
⑦ N1.1934
N1.6504
N1.6504
N1.6504
N1.7211
N2.1606
N43.9192
N5.2702
N43.9164
(N3.3174)
P32.0180
P32.2080
P32.2030
N61.6216
N3.4520
② P32.2018
P32.0151
N3.1137
P32.0172
P32.2078
P32.2064
P32.2121
N1.2216
N61.6216
P32.0150
N3.1137
N3.4509
② P32.2015
P32.2024
N2.5153
P32.2006
P32.2079
N43.9192
P32.1414
P32.1422 ①
N1.3150
N1.5120
N2.1118
P32.1415
P32.1011
(N3.3174)
P32.2003
N31.1120
② P32.0159
N31.1118
P32.0178
(N5.2368)
(N1.7206)
(P32.2009)
P32.2081
P32.2123
(N5.2367)
N51.2194
N21.5124
① Mobilux EP2
② Molykote BR 2 plus
③ Loctite 603
④ Loctite 222
⑤ Klüber Isoflex Alltime SL2
⑥ Klüber Isoflex NBU 15
⑦ 1 Nm