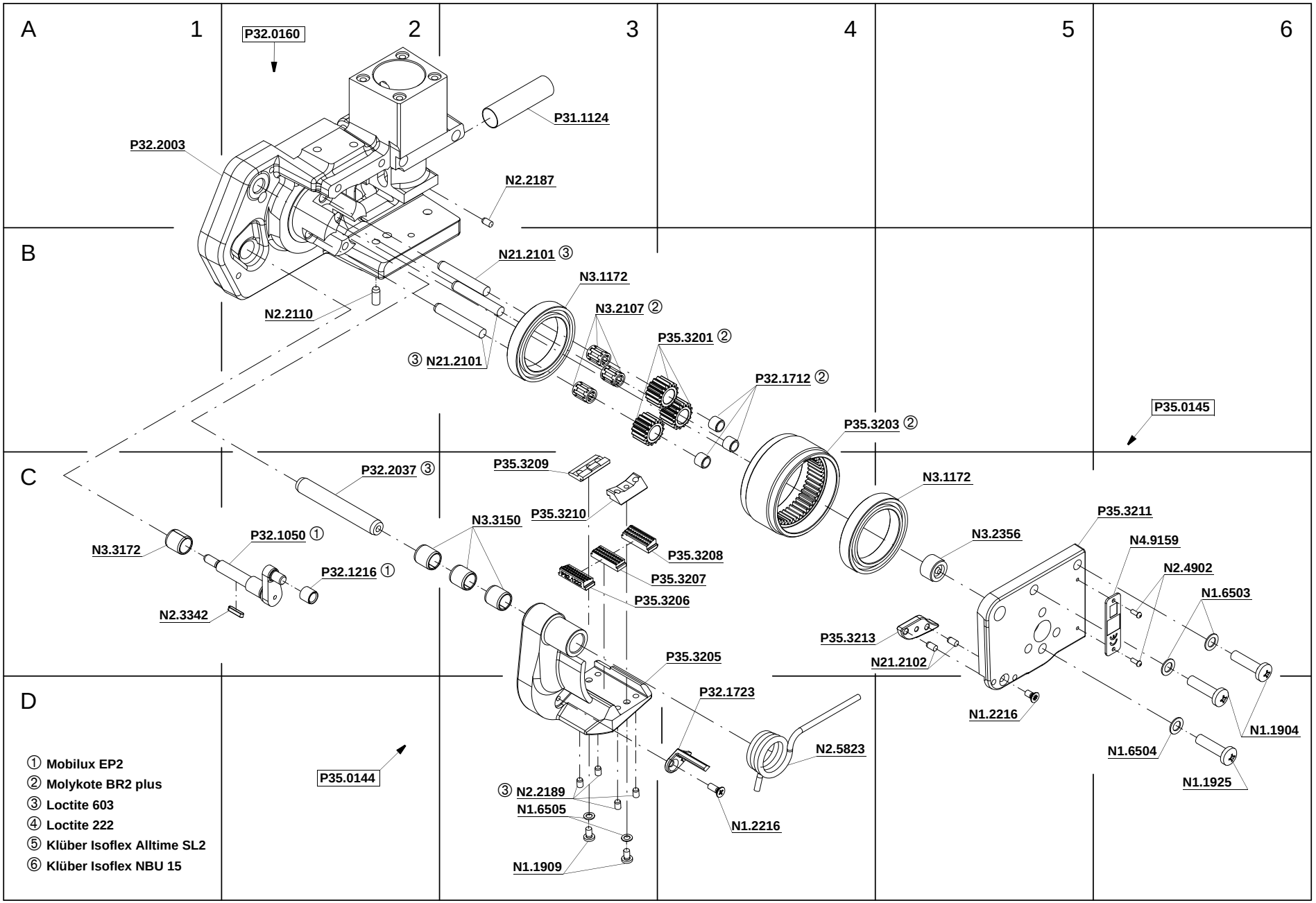
A
1
2
3
4
5
6
B
C
D
P32.0160
P31.1124
P32.2003
N2.2187
N21.2101 ③
N3.1172
N3.2107 ②
N2.2110
P35.3201 ②
③ N21.2101
P32.1712 ②
P35.3203 ②
P35.0145
P35.3209
P32.2037 ③
N3.1172
P35.3210
N3.3150
P35.3211
N3.2356
N4.9159
P32.1050 ①
N3.3172
P35.3208
N2.4902
P32.1216 ①
P35.3207
N1.6503
P35.3206
N2.3342
P35.3213
P35.3205
N21.2102
P32.1723
N1.2216
N1.1904
N2.5823
N1.6504
P35.0144
N1.1925
③ N2.2189
N1.6505
N1.2216
N1.1909
① Mobilux EP2
② Molykote BR2 plus
③ Loctite 603
④ Loctite 222
⑤ Klüber Isoflex Alltime SL2
⑥ Klüber Isoflex NBU 15

FROMM

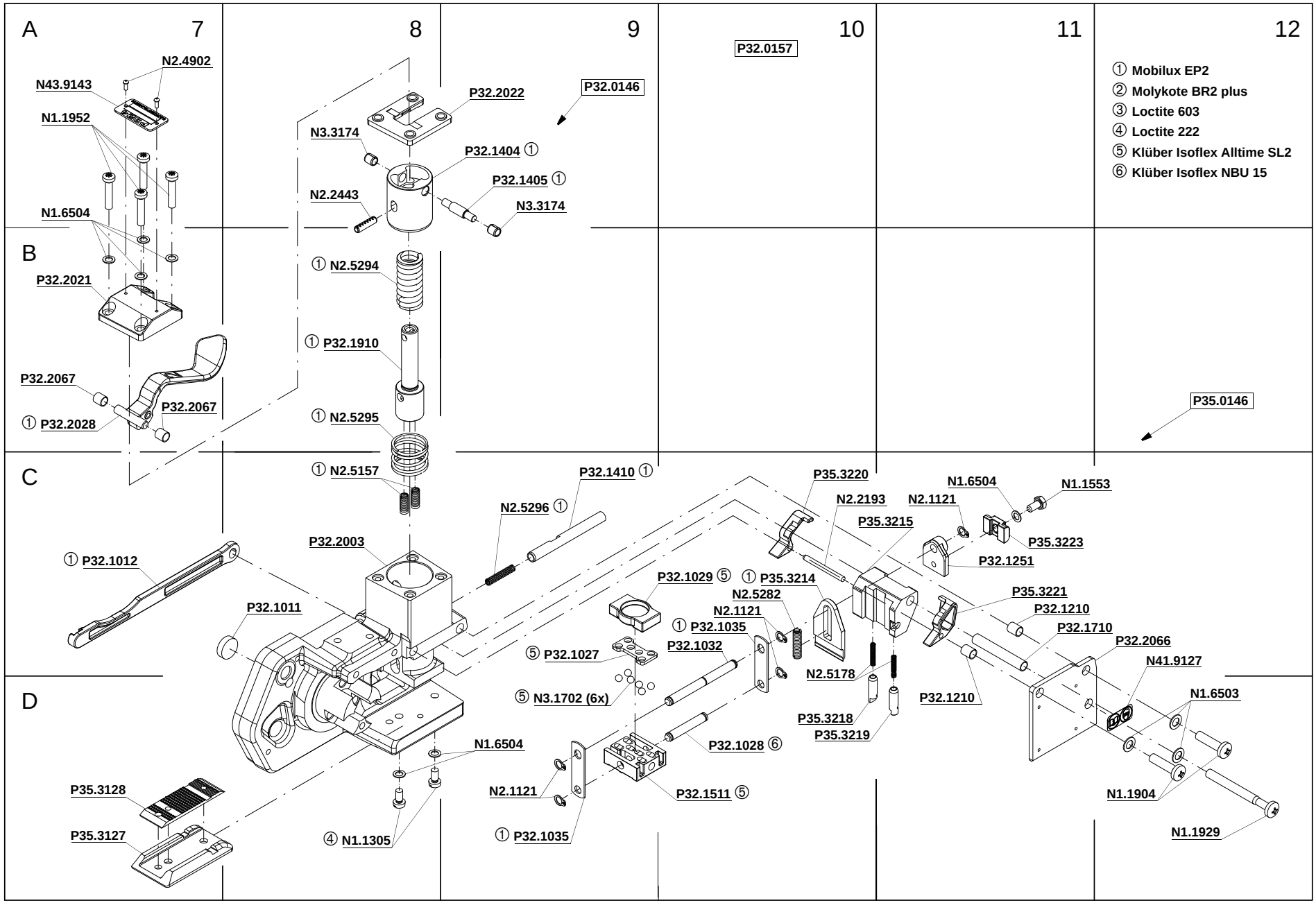
A
7
8
9
10
11
12
B
C
D
P32.0157
P32.0146
P35.0146
① Mobilux EP2
② Molykote BR2 plus
③ Loctite 603
④ Loctite 222
⑤ Klüber Isoflex Alltime SL2
⑥ Klüber Isoflex NBU 15
N2.4902
N43.9143
N1.1952
N1.6504
P32.2021
P32.2067
① P32.2028
P32.2067
P32.2022
N3.3174
P32.1404 ①
P32.1405 ①
N2.2443
N3.3174
① N2.5294
① P32.1910
① N2.5295
① N2.5157
P32.1410 ①
N2.5296 ①
P32.2003
① P32.1012
P32.1011
P32.1029 ⑤
① P35.3214
N2.5282
N2.1121
① P32.1035
⑤ P32.1027
P32.1032
⑤ N3.1702 (6x)
N2.5178
P35.3218
P35.3219
P32.1028 ⑥
P32.1511 ⑤
N2.1121
① P32.1035
N1.6504
④ N1.1305
P35.3128
P35.3127
P35.3220
N2.2193
P35.3215
N2.1121
N1.6504
N1.1553
P35.3223
P32.1251
P35.3221
P32.1210
P32.1710
P32.2066
N41.9127
P32.1210
N1.6503
N1.1904
N1.1929

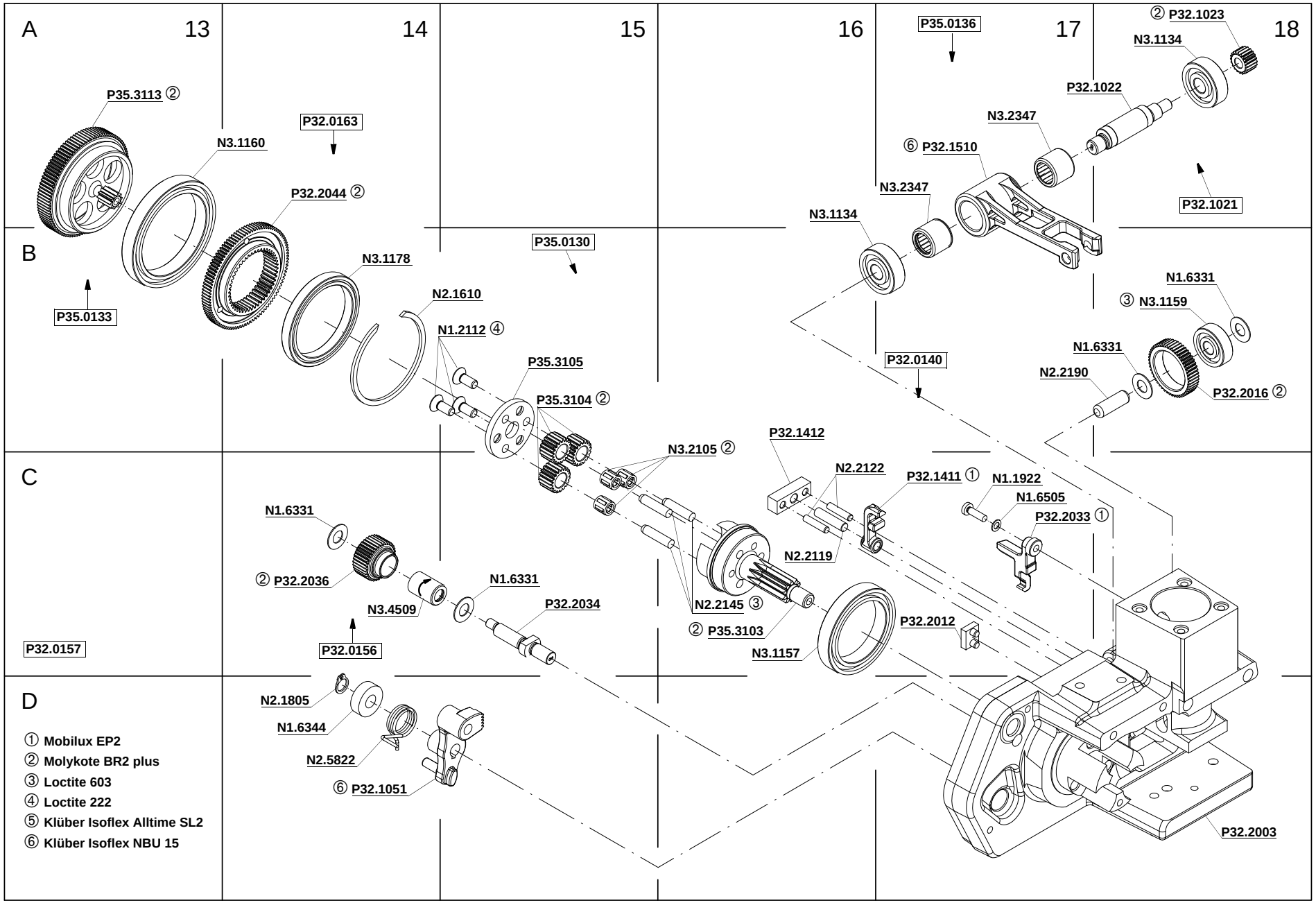
A
13
14
15
16
17
18
B
C
D
P35.3113 ②
N3.1160
P32.0163
P32.2044 ②
N3.1178
N2.1610
N1.2112 ④
P35.0133
P35.0130
P35.3105
P35.3104 ②
N3.2105 ②
P35.0136
② P32.1023
N3.1134
P32.1022
N3.2347
⑥ P32.1510
N3.2347
N3.1134
P32.1021
N1.6331
③ N3.1159
N1.6331
N2.2190
P32.2016 ②
P32.0140
P32.1412
N2.2122
P32.1411 ①
N1.1922
N1.6505
P32.2033 ①
N2.2119
N1.6331
② P32.2036
N3.4509
N1.6331
P32.2034
N2.2145 ③
② P35.3103
N3.1157
P32.2012
P32.0157
P32.0156
N2.1805
N1.6344
N2.5822
⑥ P32.1051
P32.2003
① Mobilux EP2
② Molykote BR2 plus
③ Loctite 603
④ Loctite 222
⑤ Klüber Isoflex Alltime SL2
⑥ Klüber Isoflex NBU 15

FROMM

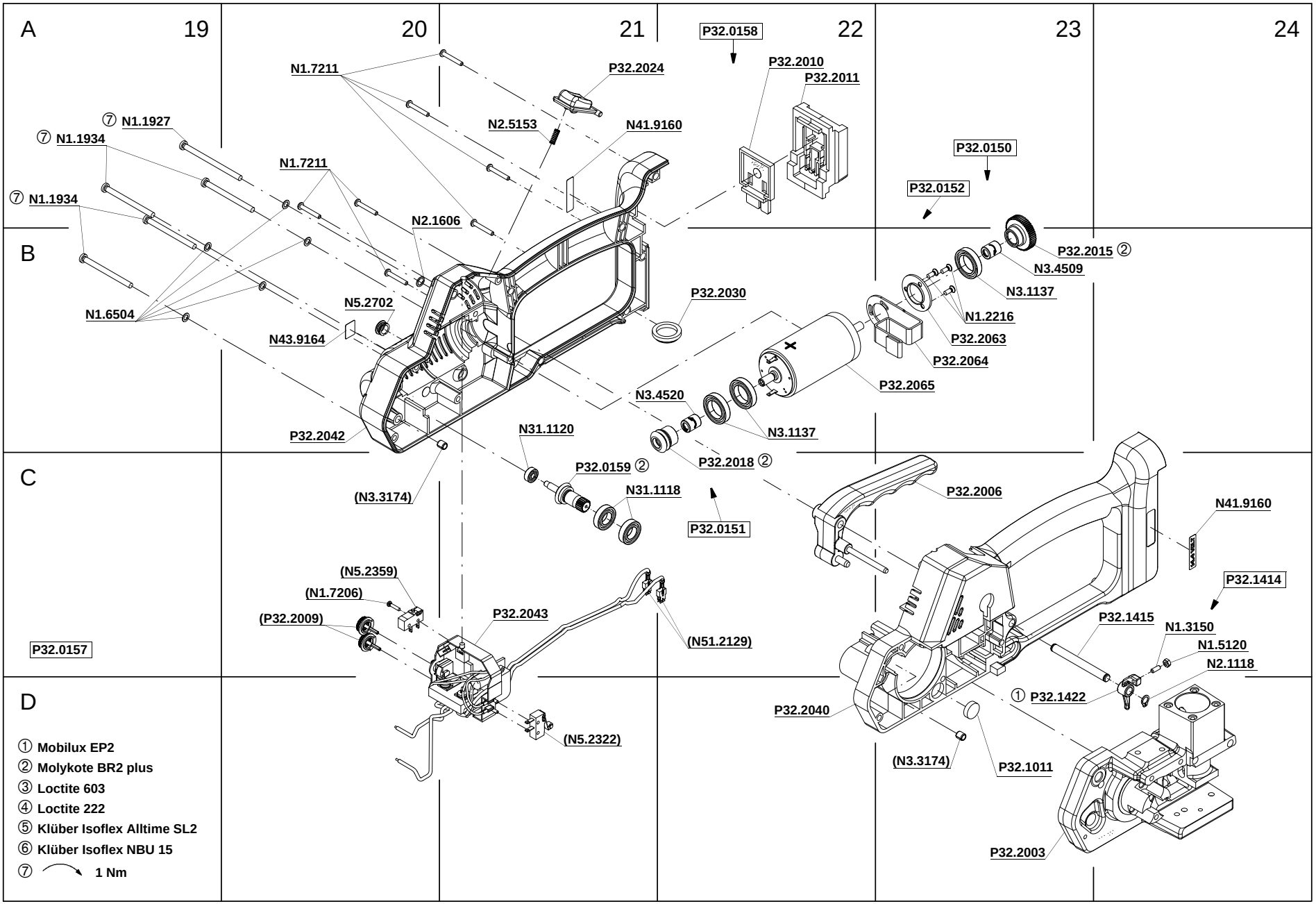
A
19
20
21
22
23
24
B
C
D
P32.0158
P32.2010
P32.2011
P32.2024
N1.7211
N2.5153
N41.9160
⑦ N1.1927
⑦ N1.1934
⑦ N1.1934
N1.7211
N2.1606
N1.6504
N5.2702
N43.9164
P32.2042
(N3.3174)
P32.0150
P32.0152
P32.2015 ②
N3.4509
N3.1137
N1.2216
P32.2063
P32.2064
P32.2065
P32.2030
N3.4520
N3.1137
P32.2018 ②
N31.1120
P32.0159 ②
N31.1118
P32.0151
P32.2006
N41.9160
P32.1414
P32.1415
N1.3150
N1.5120
N2.1118
① P32.1422
P32.2040
(N3.3174)
P32.1011
P32.2003
(N5.2359)
(N1.7206)
(P32.2009)
P32.2043
(N51.2129)
(N5.2322)
P32.0157
① Mobilux EP2
② Molykote BR2 plus
③ Loctite 603
④ Loctite 222
⑤ Klüber Isoflex Alltime SL2
⑥ Klüber Isoflex NBU 15
⑦ 1 Nm

FROMM