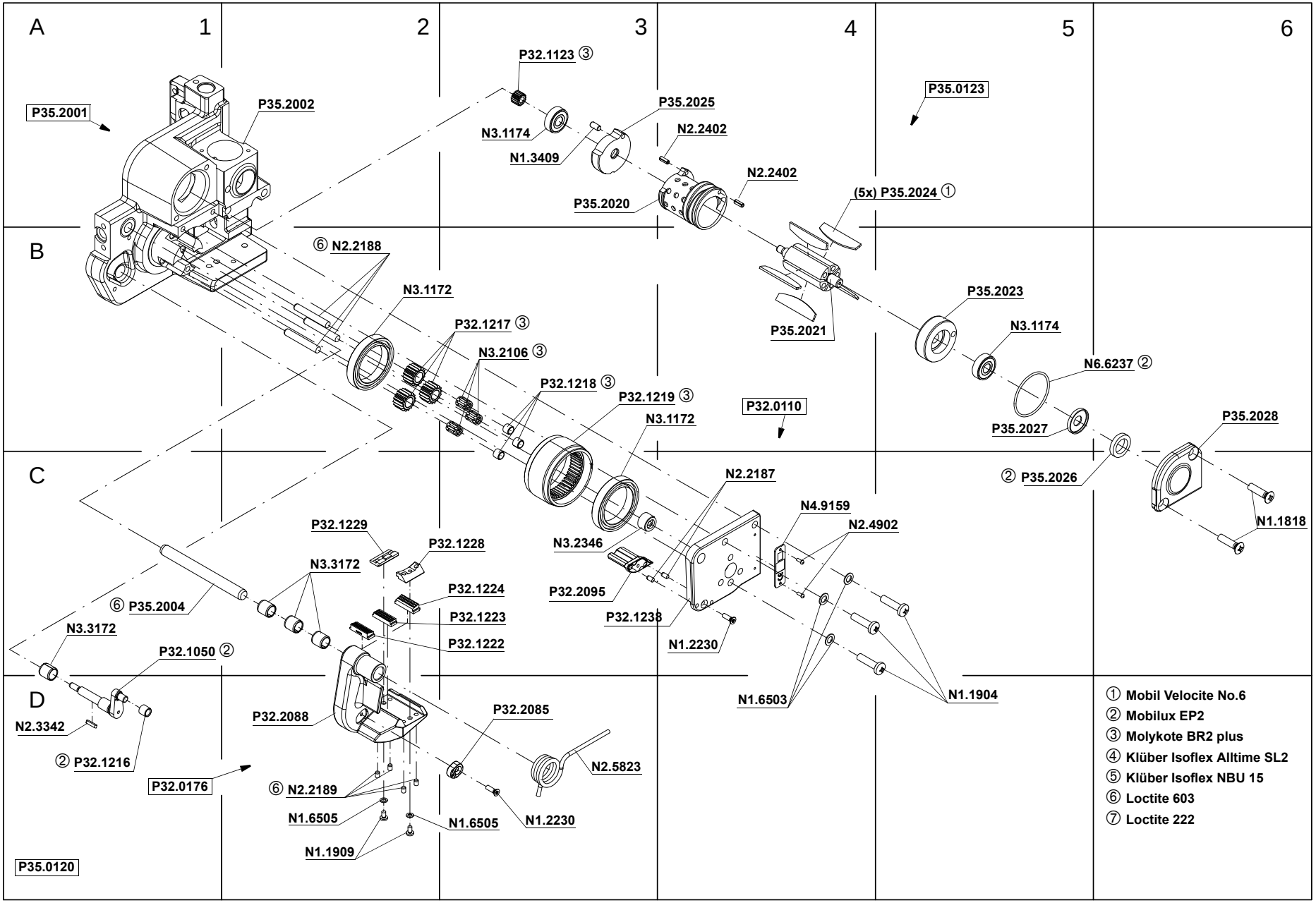
A
1
2
3
4
5
6
B
C
D
P35.2001
P35.2002
P32.1123 ③
N3.1174
N1.3409
P35.2025
N2.2402
P35.2020
N2.2402
P35.0123
(5x) P35.2024 ①
P35.2021
P35.2023
N3.1174
N6.6237 ②
P35.2027
② P35.2026
P35.2028
N1.1818
⑥ N2.2188
N3.1172
P32.1217 ③
N3.2106 ③
P32.1218 ③
P32.1219 ③
N3.1172
P32.0110
N2.2187
N4.9159
N2.4902
N3.2346
P32.2095
P32.1238
N1.2230
N1.6503
N1.1904
P32.1229
P32.1228
N3.3172
P32.1224
P32.1223
P32.1222
⑥ P35.2004
N3.3172
P32.1050 ②
N2.3342
② P32.1216
P32.0176
P32.2088
P32.2085
N2.5823
⑥ N2.2189
N1.6505
N1.6505
N1.2230
N1.1909
P35.0120
① Mobil Velocite No.6
② Mobilux EP2
③ Molykote BR2 plus
④ Klüber Isoflex Alltime SL2
⑤ Klüber Isoflex NBU 15
⑥ Loctite 603
⑦ Loctite 222

FROMM

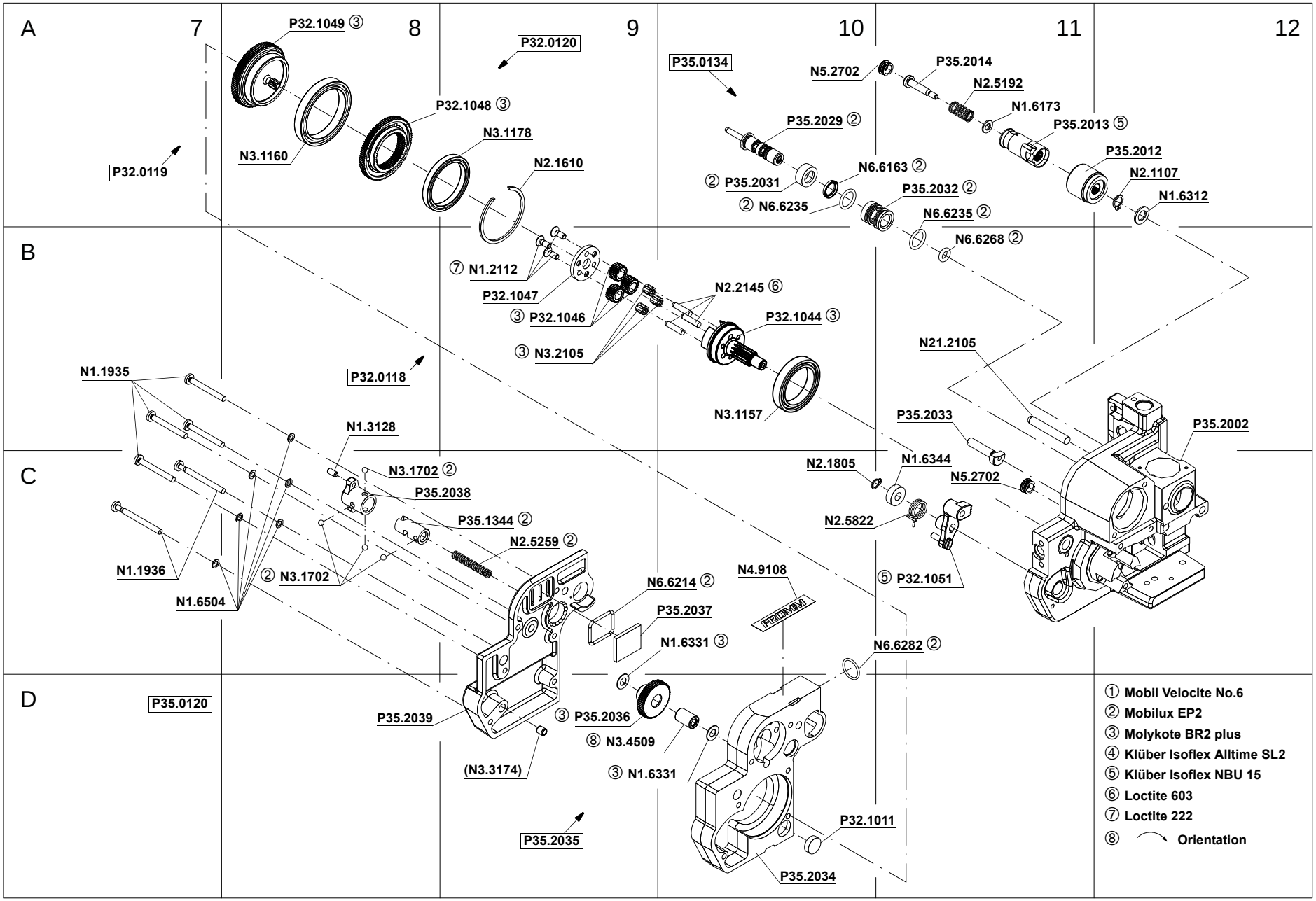
A
B
C
D
7
8
9
10
11
12
P32.1049 ③
P32.0120
P35.0134
N5.2702
P35.2014
N2.5192
N1.6173
P35.2013 ⑤
P35.2012
N2.1107
N1.6312
P32.1048 ③
N3.1178
N2.1610
N3.1160
P32.0119
P35.2029 ②
② P35.2031
N6.6163 ②
② N6.6235
P35.2032 ②
N6.6235 ②
N6.6268 ②
⑦ N1.2112
P32.1047
③ P32.1046
N2.2145 ⑥
P32.1044 ③
③ N3.2105
N3.1157
N21.2105
P35.2002
N1.1935
P32.0118
N1.3128
P35.2033
N2.1805
N1.6344
N5.2702
N3.1702 ②
P35.2038
P35.1344 ②
N2.5259 ②
N2.5822
N1.1936
② N3.1702
N1.6504
N4.9108
⑤ P32.1051
N6.6214 ②
P35.2037
N1.6331 ③
N6.6282 ②
P35.0120
P35.2039
③ P35.2036
⑧ N3.4509
(N3.3174)
③ N1.6331
P32.1011
P35.2035
P35.2034
① Mobil Velocite No.6
② Mobilux EP2
③ Molykote BR2 plus
④ Klüber Isoflex Alltime SL2
⑤ Klüber Isoflex NBU 15
⑥ Loctite 603
⑦ Loctite 222
⑧ Orientation

FROMM

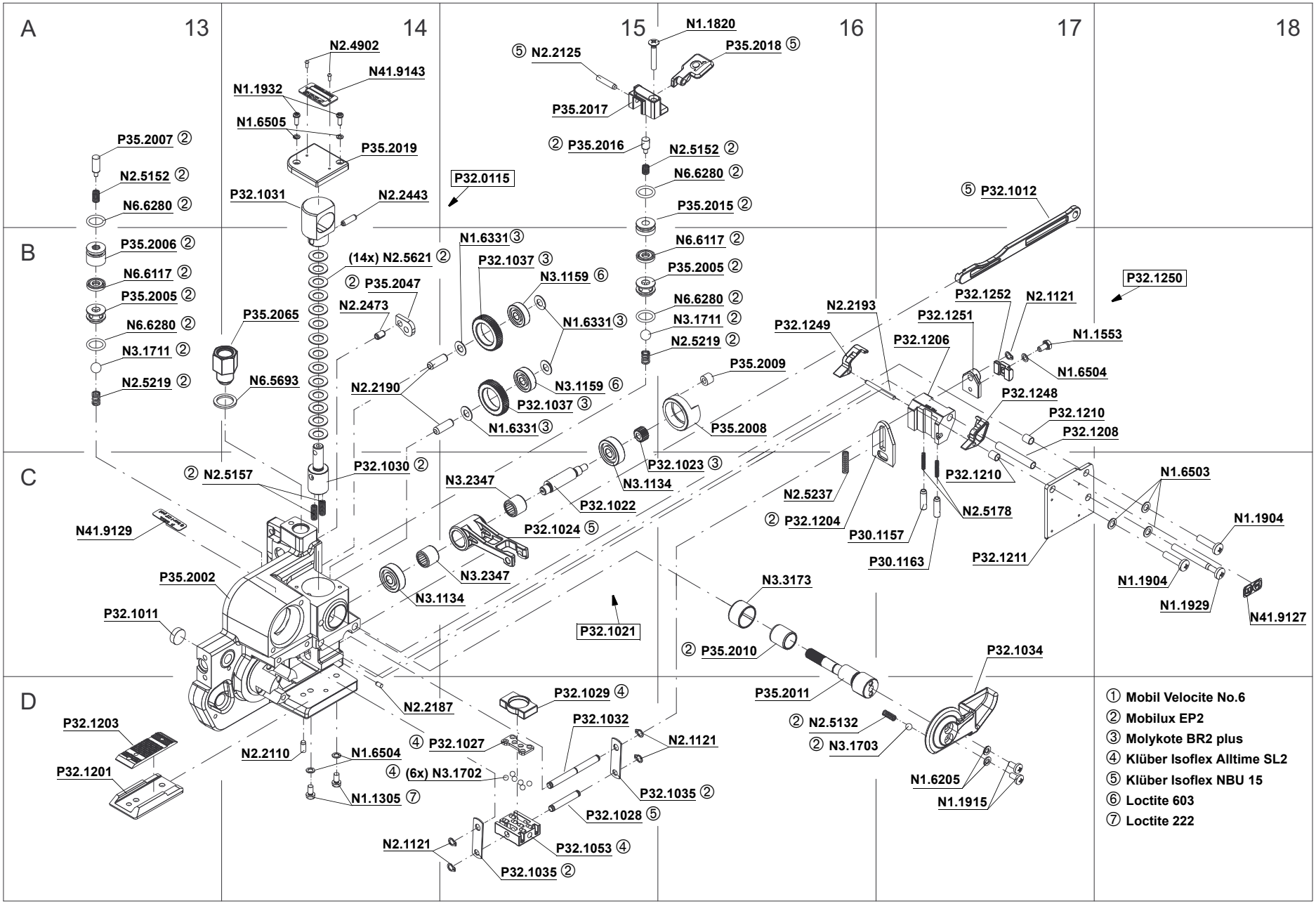
A
B
C
D
13
14
15
16
17
18
N1.1820
P35.2018 ⑤
⑤ N2.2125
P35.2017
② P35.2016
N2.5152 ②
N6.6280 ②
P35.2015 ②
N6.6117 ②
P35.2005 ②
N6.6280 ②
N3.1711 ②
N2.5219 ②
N2.4902
N41.9143
N1.1932
N1.6505
P35.2019
P32.0115
P32.1031
N2.2443
P35.2007 ②
N2.5152 ②
N6.6280 ②
P35.2006 ②
N6.6117 ②
P35.2005 ②
N6.6280 ②
N3.1711 ②
N2.5219 ②
P35.2065
N6.5693
(14x) N2.5621 ②
② P35.2047
N2.2473
N1.6331③
P32.1037 ③
N3.1159 ⑥
N1.6331③
N2.2190
N3.1159 ⑥
P32.1037 ③
N1.6331③
P35.2009
P35.2008
P32.1023 ③
N3.1134
N3.2347
P32.1022
P32.1024 ⑤
N3.2347
N3.1134
② N2.5157
P32.1030 ②
N41.9129
P35.2002
P32.1011
P32.1021
N3.3173
② P35.2010
P35.2011
P32.1034
② N2.5132
② N3.1703
N1.6205
N1.1915
⑤ P32.1012
P32.1250
P32.1252
N2.1121
N2.2193
P32.1251
P32.1249
P32.1206
N1.1553
N1.6504
P32.1248
P32.1210
P32.1208
P32.1210
N2.5237
② P32.1204
P30.1157
P30.1163
N2.5178
N1.6503
N1.1904
P32.1211
N1.1904
N1.1929
N41.9127
P32.1029 ④
P32.1032
N2.2187
④ P32.1027
N2.1121
N2.2110
N1.6504
④ (6x) N3.1702
P32.1035 ②
N1.1305 ⑦
P32.1028 ⑤
P32.1203
P32.1201
N2.1121
P32.1053 ④
P32.1035 ②
① Mobil Velocite No.6
② Mobilux EP2
③ Molykote BR2 plus
④ Klüber Isoflex Alltime SL2
⑤ Klüber Isoflex NBU 15
⑥ Loctite 603
⑦ Loctite 222

FROMM

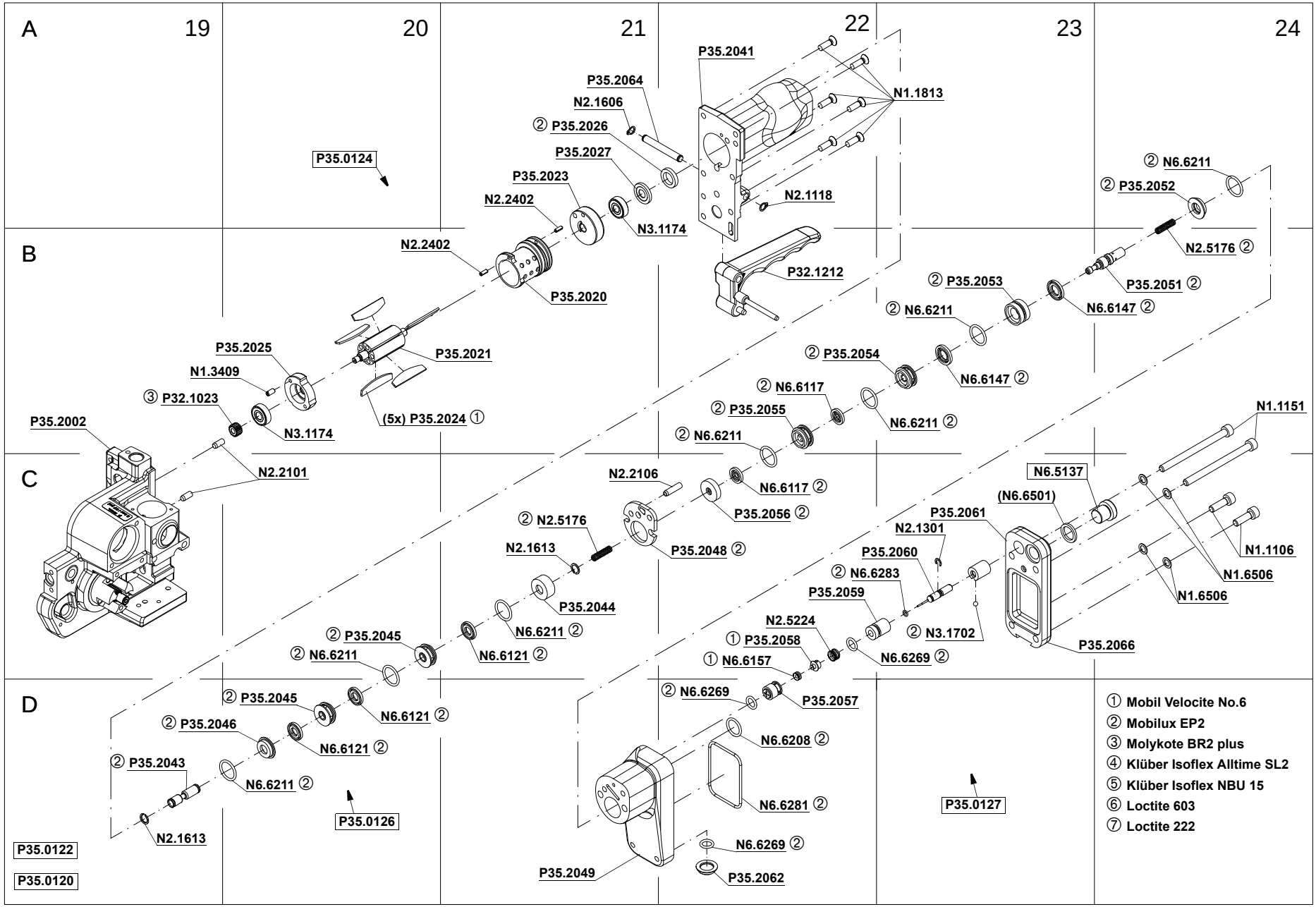
A
19
20
21
22
23
24
B
C
D
P35.0124
P35.2041
P35.2064
N2.1606
② P35.2026
P35.2027
P35.2023
N2.2402
N3.1174
N1.1813
N2.1118
P32.1212
② N6.6211
② P35.2052
N2.5176 ②
P35.2051 ②
② P35.2053
N6.6147 ②
② N6.6211
② P35.2054
N6.6147 ②
② N6.6117
② P35.2055
N6.6211 ②
② N6.6211
N2.2402
P35.2020
P35.2021
P35.2025
N1.3409
③ P32.1023
N3.1174
(5x) P35.2024 ①
P35.2002
N2.2101
N2.2106
N6.6117 ②
P35.2056 ②
② N2.5176
N2.1613
P35.2048 ②
P35.2044
N6.6211 ②
② P35.2045
② N6.6211
N6.6121 ②
② P35.2045
N6.6121 ②
② P35.2046
N6.6121 ②
② P35.2043
N6.6211 ②
N2.1613
P35.0126
P35.0122
P35.0120
N1.1151
N6.5137
(N6.6501)
P35.2061
N2.1301
P35.2060
② N6.6283
P35.2059
N2.5224
① P35.2058
① N6.6157
② N3.1702
N6.6269 ②
P35.2066
N1.1106
N1.6506
N1.6506
② N6.6269
P35.2057
N6.6208 ②
N6.6281 ②
N6.6269 ②
P35.2062
P35.2049
P35.0127
① Mobil Velocite No.6
② Mobilux EP2
③ Molykote BR2 plus
④ Klüber Isoflex Alltime SL2
⑤ Klüber Isoflex NBU 15
⑥ Loctite 603
⑦ Loctite 222

FROMM